Asbestos: The Analysts' Guide

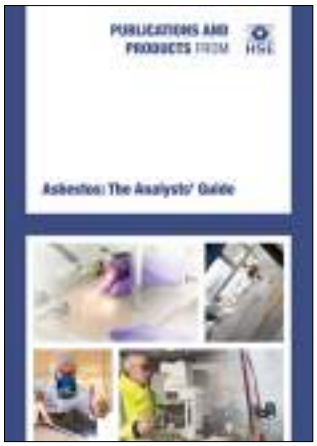

HSG248 (Second edition)
Published 2021

This document is a revised version of *Asbestos: The analysts' guide for sampling analysis and clearance procedures*, first published in 2005. It contains guidance for analysts involved in asbestos work and is the authoritative source of asbestos analytical procedures within Great Britain. The guidance has been updated to take account of legal changes, findings from HSE's interventions, and developments in analytical procedures and methodology. It provides clarification on technical and personal safety issues, especially in relation to sampling and 4-stage clearances. Information to assess the presence of asbestos in soils and made ground is included for the first time. The guidance is also designed to assist analysts in complying with the Control of Asbestos Regulations 2012. The document should also be particularly useful to several other groups, including asbestos consultants, occupational hygienists, safety professionals, asbestos removal contractors, building owners and people with responsibility for managing asbestos in properties and estates.

London: TSO

Published by TSO (The Stationery Office), part of Williams Lea,
and available from:

Online
https://books.hse.gov.uk/

Mail, Telephone, Fax & E-mail
TSO
PO Box 29, Norwich, NR3 1GN
Telephone orders/General enquiries: 0333 202 5070
Fax orders: 0333 202 5080
E-mail: customer.services@tso.co.uk
Textphone 0333 202 5077

TSO@Blackwell and other Accredited Agents

Published with the permission of the Health and Safety Executive on behalf of the Controller of Her Majesty's Stationery Office.

© Crown copyright 2021

First published 2005
Second edition 2021 (amended July 2021)

ISBN 978 0 7176 6707 9

This information is licensed under the Open Government Licence v3.0. To view this licence, visit http://www.nationalarchives.gov.uk/doc/open-government-licence/OGL

Any enquiries regarding this publication should be sent to: copyright@hse.gov.uk

Some images and illustrations in this publication may not be owned by the Crown and cannot be reproduced without permission of the copyright owner. Where we have identified any third party copyright information you will need to obtain permission from the copyright holders concerned. Enquiries should be sent to copyright@hse.gov.uk

Printed in the United Kingdom for The Stationery Office.

This guidance is issued by the Health and Safety Executive. Following the guidance is not compulsory, unless specifically stated, and you are free to take other action. But if you do follow the guidance you will normally be doing enough to comply with the law. Health and safety inspectors seek to secure compliance with the law and may refer to this guidance.

CONTENTS

Introduction **5**
Purpose of this guidance 5
Intended audience 6
Legislation 6
Health effects 7

PART 1: ROLE AND ARRANGEMENTS **9**

Chapter 1 The analyst's role and responsibilities **10**
Risk to analysts 10
Notification of work 11
Risk assessment and plan of work 12
Four-stage clearance 12
Professional standards 13

Chapter 2 Accreditation and quality assurance **14**
Organisational competence 15
Quality control 15
Monitoring site work 15

Chapter 3 Competence and qualifications **18**
Organisation-related 19
Health and safety 19
Function-specific 20
Ongoing/refresher 22

PART 2: SAMPLING, ANALYSIS AND CLEARANCE WORK **25**

Chapter 4 Bulk sampling and material analysis **26**
Introduction and regulatory requirements 26
Safe systems of work 26
Bulk sampling strategies 27
Number of samples 30
Procedures 31
Sample and site labelling 31
Methods 32
Records and reporting of sampling 33
Bulk sampling of stone materials (with small proportions of asbestos) 34

Chapter 5 Measurement of airborne fibre concentrations **35**
Introduction and regulatory requirements 35
Personal sampling 35
Static sampling 37
Air sampling and analysis by phase contrast microscopy 38
Use and limitations of PCM 39
Sampling strategies including the statutory measurement method for the control limit 41
Sampling types 42
Static sampling 43
Analysis, calculation, recording and reporting of results 48
Other sampling methods 49

Chapter 6 Site clearance and certification **50**
Introduction and regulatory requirements 50
Scoping and planning the four-stage clearance 52

Site clearance process and certification 53
Visual confirmation of site cleanliness and thorough cleaning 55
Remaining asbestos materials 56
Cleaning of areas after incidents or damage 57
Clearance where there is inadequate enclosure integrity 57

Chapter 7 Soils and made ground 58
Introduction and regulatory requirements 58
Differences between asbestos in soils and asbestos in buildings 59
Initial investigation to establish whether ACMs could be present 59
The asbestos risk assessment process for CAR 60
Preliminary site survey 60
Main site survey 61
Risk estimation and evaluation 61

PART 3: CONTROLLING THE RISKS TO ANALYSTS 65

Chapter 8 Personal protective equipment 66
Introduction and regulatory requirements 66
Respiratory protective equipment 67
Other personal protective equipment 70
PPE and RPE for asbestos activities 71
Summary of clothing, PPE and RPE to be worn 72

Chapter 9 Decontamination procedures 73
Introduction 73
Four-stage clearance 73
Preliminary decontamination 73
Full decontamination 77
Decontamination following bulk sampling 77

PART 4: TECHNICAL APPENDICES 79

1 Fibres in air: Sampling and evaluation of fibres by phase contrast microscopy 80
2 Determination of asbestos in bulk materials 110
Annex 1 Glossary of terms that appear in Appendix 2 144
3 Water absorption test: Method to differentiate between asbestos insulating boards and asbestos cement sheets 147
4 Fibres in air: Discrimination between fibre types in samples of airborne dust on filters using microscopy 153
Annex 1 Hierarchy of techniques and decision-making 164
Annex 2 Additional equipment required 165
Annex 3 Observations that can be made by PCM 166
Annex 4 PLM examination of mounted acetone/triacetin filters 170
Annex 5 Discrimination fibre count sheet for PCM/PLM 173
5 Four-stage clearance and decontamination unit clearance methods 174
6 Templates 195
7 Surveying and sampling for asbestos in soil and made ground 203
8 Soil and made ground: On-site sampling and measurement of airborne fibres and dust for risk assessment 218
9 Recommended core competences to be achieved via on- and off-the-job development 221

END MATTER 229
Abbreviations 230
References 231
Acknowledgements 237
Further information 238

INTRODUCTION

Purpose of this guidance

This document is a revised version of the *Analysts' Guide* first published in 2005. It contains guidance for analysts* involved in asbestos work and is the authoritative source of asbestos analytical procedures within Great Britain.

The guidance has been updated to take account of legal changes, findings from HSE's Analyst Inspection Programme[1] and developments in analytical procedures and methodology. It provides clarification on technical and personal safety issues; especially in relation to 4-stage clearances. Information to assess the presence of asbestos in soils and made ground is also included.

The guidance is designed to help analysts comply with the Control of Asbestos Regulations 2012 (CAR).[2] It should be read in conjunction with other HSE guidance including:

- the associated Approved Code of Practice (ACOP) and guidance L143 (current edition);[3]
- HSG210 *Asbestos essentials*;[4]
- HSG247 *Asbestos: The licensed contractors' guide*;[5]
- HSG264 *Asbestos: The survey guide*;[6] and
- information on the HSE website.

All references to 'the regulations' in this guide are references to the version of CAR current at the time of publication. The same applies to references to ACOP L143 and other HSE regulations and guidance.

Analysts have an important role to play in the protection of people's health and it is essential that they act competently and professionally. This document specifies the methods which should be used by analysts for the measurement and identification of asbestos. It also provides examples of templates and forms which can be used to record information. In addition, it provides instructions on other matters including clearance procedures for asbestos removal and information on personal safety for analysts such as the use of personal protective equipment (PPE), respiratory protective equipment (RPE) and decontamination processes. All the topics covered by the guide are listed in the contents page.

Although this guidance covers the sampling and analysis of suspected asbestos-containing materials (ACMs), it does not go into detail about surveying and assessment for asbestos. Surveying of premises is comprehensively covered in HSG264 *Asbestos: The survey guide*. Guidance on the assessment and management of asbestos in buildings is given elsewhere (ie the HSE website,[7] *Managing asbestos in buildings: A brief guide* INDG223[8] and *A comprehensive guide to managing asbestos in premises* HSG227).[9] Industry-based guidance published by the Joint Industry Working Group on Asbestos in Soils,[10] CIRIA C733[11] and the SCA Blue Book[12] are all considered to be compatible with *Asbestos: The Analysts' Guide*.

* Note: the use of the term 'analysts' as used within this document depends on the context. It may refer to individual analysts or an organisation as an analyst's employer. Analysts are individuals or organisations involved in the sampling, analysis and assessment of asbestos under the regulations. Analyst organisations may also provide a range of other advisory and consultancy services. Asbestos samples may also be taken by asbestos surveyors.

Intended audience

The target audience for this document is technical and includes asbestos analysts, asbestos consultants, occupational hygienists and safety professionals. The publication should also be useful to asbestos removal contractors and supervisors, employers, building owners and people with responsibility for managing properties and estates. This publication is a guidance document but it sets out various procedures to comply with CAR2012 and the ACOP L143. Only UKAS-accredited organisations may be used for activities such as 4-stage clearance and where compliance/conformity is required with the ISO standards 17020 and 17025. These include requirements for laboratory procedures, quality control and assurance, and impartiality arrangements. Unless specifically stated, you are free to take other equally effective action, but if you do follow this document, you will normally be doing enough to comply with the law.

Legislation

CAR applies to all work activities involving asbestos. This includes all analysts' work that disturbs asbestos. It sets minimum standards for the protection of employees and others who could be affected. CAR sets requirements for the employer to:

- identify the presence of asbestos and its type and condition before work starts (Regulation 5);
- assess the risk from asbestos for workers and others (Regulation 6);
- prepare a suitable plan of work (POW) (Regulation 7);
- make sure employees receive appropriate information, instruction and training (Regulation 10);
- prevent employees being exposed to asbestos or, if this is not possible, to put into place the measures and controls to reduce exposure to as low as reasonably practicable (ALARP) (Regulation 11);
- prevent or reduce the spread of asbestos to the lowest level reasonably practicable (Regulation 16);
- arrange regular monitoring of airborne asbestos fibres (Regulation 19) where necessary;
- make sure air testing and site clearance certification is carried out to set standards;
- provide suitable washing and changing facilities (Regulation 23).

The regulations also require building owners to manage the risk from asbestos in non-domestic premises (Regulation 4) to ensure that asbestos does not cause harm to anyone who works on or occupies the building or premises.

The regulations apply to the self-employed as they apply to an employer (Regulation 3(1)). In addition, the people who could be affected by the work must also be taken into account (Regulation 3(3) and the Health and Safety at Work etc Act 1974).[13] This includes employees of other employers, people occupying buildings and members of the public.

The identification of asbestos may also be required as part of planned construction work. Relevant roles and responsibilities for this are covered by the Construction (Design and Management) Regulations 2015 (CDM). Full details regarding this are contained within HSG L153: *Managing Health and Safety in Construction*[14] (see also paragraph 4.3).

Employers must consult safety representatives appointed by recognised trade unions under the Safety Representatives and Safety Committees Regulations 1977[15] about health and safety issues. Employees not covered by such representatives must be consulted, either directly or indirectly, via elected representatives of employee safety, according to the Health and Safety (Consultation with Employees) Regulations 1996.[16]

Health effects

Inhalation of asbestos fibres can cause several fatal or serious respiratory conditions. Asbestos is a category 1 human carcinogen. It can cause two main types of cancer: mesothelioma and lung cancer (see Box 1.1). Asbestos can also cause asbestosis (scarring of lung tissue). Asbestos-related diseases can take 15–60 years to develop. Other less disabling lung changes such as pleural plaques and diffuse pleural thickening may be indicative of asbestos exposures but can be due to other causes. Further information on the types of disease associated with worker exposure to asbestos is given on the HSE website.[17]

Any work which disturbs asbestos materials will cause asbestos fibres to become airborne, putting analysts and others at risk. Asbestos is a cumulative hazardous material; the overall risk of developing mesothelioma depends on the number of repeated exposures which occur over a lifetime. However, single occupational exposures are not without risk. A safe threshold of exposure for mesothelioma has not been identified (although the possibility of a practical threshold cannot be discounted). Therefore, each single exposure gives rise to a risk of developing disease in its own right. As the disease can take several decades to develop, there is no immediate ill-health effect.

Asbestos kills more people in the UK than any other single work-related source. There are estimated to be more than 5000 asbestos-related deaths a year[18] at the time of writing. These deaths are mostly the result of past heavy exposures from the manufacturing and installation of asbestos products, particularly asbestos insulating board (AIB). However, many ACMs remain in place in buildings and must be managed to reduce the exposure and risk. There is an increased risk associated with exposure to amphibole asbestos fibres (eg amosite and crocidolite) in comparison with chrysotile.[19]

Box 1.1 Asbestos cancers

Mesothelioma
Mesothelioma is a cancer of the cells that make up the lining around the outside of the lungs and inside the ribs (pleura), or around the abdominal organs (peritoneum). By the time it is diagnosed, it is almost always fatal. Like other asbestos-related diseases, mesothelioma has a long latency period from first exposure to the onset of disease, on average 30–40 years.

Lung cancer
Lung cancer is a malignant tumour of the lungs' air passages. The tumour grows through surrounding tissue, invading and often obstructing air passages. The time between exposure to asbestos and the occurrence of lung cancer is on average 20–30 years. It should be noted that there is a synergistic effect between smoking and asbestos exposure, which significantly increases the risk of developing lung cancer.

Part 1: Role and arrangements

1 THE ANALYST'S ROLE AND RESPONSIBILITIES

1.1 Analysts provide a wide range of specialist services on asbestos-related projects. These include management and consultancy services, asbestos sampling and analysis as well as asbestos removal-related activities. Their role has been developing and growing in importance. Analysts are often involved in assessments of environmental spread and contamination, traditional airborne personal and static sampling, enclosure work and reassurance sampling.

1.2 Some 'building' clients (see paragraph 1.22) and licensed contractors may request greater analyst involvement in asbestos removal activities. The analyst can provide a range of monitoring and support services including:

- Work planning:
  - advising building clients on removal work
  - carrying out pre-removal inspections and bulk sampling
  - discussing potential issues with obtaining clearance
  - personal monitoring strategies for removal operatives
- Site management and monitoring:
  - overseeing the smoke test
  - carrying out static air monitoring or reassurance air sampling
  - conducting extraction equipment performance testing
  - enclosure visual inspections
  - visual inspection of decontamination unit (DCU), waste and transit routes
  - leak testing of enclosures and investigation of 'failures'
  - measuring negative pressure unit (NPU) airflows on site
  - measuring negative pressure in the enclosure
  - visual inspections of cleanliness of equipment leaving site (eg Class H vacuums, airline RPE)
  - liaison with client management team, licensed contractor and asbestos consultant.

1.3 Over the last 10 years, there have been on average between 30,000 and 35,000 annual notifications of licensed work in Great Britain, each one requiring a 4-stage clearance by an analyst. The analyst clearly has an important role in ensuring that workplaces and premises are safe for reoccupation or demolition after asbestos removal work has taken place.

Risk to analysts

1.4 As there is no known lower dose threshold for mesothelioma, all occupational exposures present a risk of developing mesothelioma.[20] The regulations therefore require employers to prevent exposure or reduce it to the lowest level reasonably practicable.

1.5 Analysts may provide a wide range of specialist services on asbestos-related projects. Many of these activities will involve entering an asbestos environment or directly disturbing ACMs. In all cases there is the potential for asbestos exposure.

1.6 The nature and extent of exposure will depend on several factors including the activity, the type and condition of the ACM and the effectiveness of any controls. For example, all entry into asbestos enclosures carries a risk of exposure to airborne fibres. Analysts should avoid as far as possible entering 'live'* enclosures while removal or remediation work is still being carried out. If entry into a 'live' enclosure does occur there will be potential exposure to asbestos fibre concentrations above the control limit or short-term exposure limit (STEL) (definitions are given in paragraphs 5.24–5.25).

(*Note: the term 'live' enclosure refers to a situation where removal work in the enclosure is still ongoing and the enclosure has not been cleaned and prepared for the 4-stage clearance.)

1.7 Enclosure entry for other reasons such as bulk sampling, clearance inspections and air sampling are likely to encounter lower airborne fibre levels. However, any direct disturbance of asbestos during these situations (eg brushing surface dust) can potentially give rise to increased short-term airborne concentrations. Bulk sampling outside enclosures or for lower hazard non-licensed ACMs can also give rise to exposure as sample collection often involves physically breaking asbestos materials.

1.8 Personal monitoring is required by Regulation 19 unless exposure is not liable to exceed the control limit. The ACOP states that employers should carry out regular personal monitoring to assess the risks, confirm that respiratory protection is adequate and that effective controls continue to be applied (see ACOP paragraphs 479–485).

1.9 It is recommended that personal monitoring is performed periodically (eg in ~5% of air sampling jobs). The personal sampling strategy should make sure that all analysts are included and that the regular monitoring includes the higher-risk activities. Such activities include clearance sampling inside enclosures, taking bulk samples and live enclosure entry. Static monitoring (including clearance sampling) is not a substitute for personal sampling. Static monitoring may underestimate personal exposures where the disturbance is close to the breathing zone of the person. Clearance sampling cannot be relied on to provide details of personal exposure.

1.10 Much of an analyst's work is likely to be low risk. Recent personal monitoring carried out by HSE in a range of sample collection circumstances (excluding enclosure entry) showed that in most cases (74%) exposure could be reduced to below the limit of detection (LOD) with effective controls in place. Highest measured results were 0.01–0.04 f/ml (4-hour time-weighted average).[21]

Notification of work

1.11 CAR requirements regarding notification of work with asbestos (Regulation 9) and health records and medical surveillance (Regulation 22) are determined by the criteria set out in Regulation 3(2). The requirements do not apply for lower-risk activities:

- that are sporadic and low-intensity; and
- where exposures are clearly likely to be below the control limit, and
- that involve particular types of lower-risk work, including 'air monitoring and control, and the collection and analysis of samples to ascertain whether a specific material contains asbestos'.

1.12 Analyst activities are frequently lower risk. Analysts do not carry out licensed or notifiable non-licensed asbestos work. Consequently, analysts' work activities will generally be exempt from notification, health recording and medical surveillance requirements.

1.13 However, there may be some unusual work activities where potentially analysts' exposure may meet the notification criteria (eg 'live' enclosure entry as part of management or monitoring removal work). In situations where exposure may be significant, the employer should also assess the risk of exposure to determine the need for employee health records and medical surveillance against the criteria.[22, 23] The results of personal airborne monitoring (see paragraph 1.9) should be included in the risk assessment.

1.14 Details on any health records and medical surveillance that are required can be found in ACOP L143 (paragraphs 499–518).

Risk assessment and plan of work

1.15 Analysts will potentially be exposed to asbestos in many aspects of their work. All sampling-related activities and other work, particularly 4-stage clearances, must have an adequate risk assessment and site-specific POW prepared by a competent person. The risk assessor should have specific knowledge and understanding of the correct control procedures for sampling as well as other risks or site-specific issues which may arise (eg access safety, work at height).

1.16 The site-specific POW for 4-stage clearances should also include the routine aspects of the site work (eg wearing PPE and RPE, decontamination arrangements and emergency procedures). The arrangements for these activities can be set out in company written procedures.

Four-stage clearance

1.17 The Analyst Inspection Programme (see Box 1.1) highlighted issues regarding 4-stage clearances, especially time pressures and resources. Many of the issues related to the limited involvement of the analyst in initial scoping of the work and the setting up of formal arrangements to reflect the extent, duration and complexity of the 4-stage clearance. The 4-stage clearance needs to be properly scoped in a timely manner to enable adequate planning and sufficient clarity in the clearance process requirements and the allocation of sufficient resources. The scoping exercise is also required to enable the analyst to conduct an adequate risk assessment and to prepare a suitable POW.

1.18 The POW must cover all aspects of the 4-stage clearance process including:

- the risks from asbestos, taking into account the site's layout, complexity and the potential for dust disturbance;
- additional risks resulting from inadequate cleaning by licensed contractors;
- non-asbestos risks including work at height, confined/restricted spaces, electrical/gas/isolation and lone working.

1.19 The analyst will need to be provided with sufficiently detailed information before the work starts to enable the risk assessment and site-specific POW to be prepared. This should be achieved through a pre-removal site visit. If this is not practical, then the analyst should be provided with a copy of the contractor's POW or appropriate details regarding the nature of the work. These details include site access, layout, complexity (including voids, ducting, cavities, ledges, cabling etc) and the ACMs involved (quantity, type etc). The licensed contractor has legal duties to co-operate with the analyst and provide them with adequate information in a timely manner.

1.20 Failing a 4-stage clearance can have significant implications in time, costs and reputations, particularly where jobs are over-running or high-profile. It is therefore possible that analysts may be challenged on their clearance decisions. Analysts must have appropriate training and support to deal with such situations. Analysts need to be able to contact colleagues/senior staff for immediate support if unresolvable challenges or other situations arise.

Box 1.1 Analyst Inspection Programme

HSE carried out an inspection programme of asbestos analysts' work in 2014–15 as part of the preparation for this updated guide. The report was published in 2018.[1] The inspection programme assessed the range and scale of analyst activities and involved appraisal of administrative procedures and on-site activities. The study focused in particular on the practices and standards of the 4-stage clearance procedure which is carried out after removal of asbestos materials to ensure that the area is safe for re-occupation by the public. The findings of the study are highlighted in this guide.

Professional standards

1.21 The analyst must ensure impartiality and independence for site clearance and certification. It is a requirement of accreditation. It is also important that the Certificate for Reoccupation (CfR) is issued to both the licensed contractor and the person/organisation with responsibility for the premises irrespective of who employs the analyst.

1.22 It is strongly recommended that the analyst for site clearance certification is independently sourced and employed by the building owner or occupier (ie building client) in control of the premises. This arrangement should:

- create a clearer and healthier contractual situation on site;
- help avoid any potential conflict of interest (perceived or real) that may arise should the analyst be employed by the removal contractor;
- give added assurance that the inspection process is undertaken impartially and objectively, as required by International Organisation for Standardisation (ISO) 17025;[24]
- enable the independent analyst to be involved in resolving any problems (between the building client and contractor) that may arise.

1.23 However, even where the building client employs the analyst, there is the potential for 'shared links' between the analyst and contractor which could influence the analyst's impartiality. Shared links can include common ownership/same holding company, common management, contractual arrangements (including financial or commercial, eg where the contractor is a major source of work for the analyst organisation), informal understandings or other factors that may be able to influence the outcome of the site clearance certification.

1.24 The analyst should not perform site clearance certification where such shared links exist. However, if shared links are unavoidable, the building client should be made fully aware of them. This should be in writing. The work should not start without the building client's written agreement. Clear safeguards to protect the building client also need to be in place (ie the analyst can demonstrate that their organisation has the necessary independence to be completely impartial in conducting such site clearances). The analyst's organisation should have a written policy and procedures with effective monitoring to ensure independence and impartiality for each analyst is achieved.

1.25 Analysts can obtain qualifications and professional affiliations/memberships that are designed to enhance their role, competence and authority. For example, the Faculty for Asbestos Assessment and Management (FAAM)[25] has been established by the British Occupational Hygiene Society (BOHS). FAAM offers several grades of membership to promote professional recognition. Membership should provide reassurance to clients on competence and adherence to a professional code of ethics. Both BOHS and the Royal Society for Public Health (RSPH)[26] also oversee formal systems of proficiency modules and competent person assessment (see Chapter 3).

2 ACCREDITATION AND QUALITY ASSURANCE

2.1 Analysts perform a wide range of important activities. It is therefore essential that individual analysts are competent and that the organisations employing them can demonstrate systems capable of ensuring sustained performance to the required quality. The regulations set out a number of performance and quality requirements. These are summarised below. This chapter also highlights requirements that are conditions of analyst accreditation (at the time of publication).

2.2 Regulation 20(3) of CAR requires that analysts meet the performance criteria set out in ISO 17025 where they carry out any measurement of the concentration of asbestos fibres in air. This standard sets requirements for the competence of testing and calibration laboratories. Conformity with ISO 17025 is demonstrated by obtaining accreditation from a recognised body. Currently the United Kingdom Accreditation Service (UKAS) is the sole national accreditation body for the UK. The UKAS document LAB 30[27] details the accreditation requirements and procedures.

Figure 2.1 Regular inter-laboratory counting exchange slides and documentation

2.3 Regulation 20(4) of CAR also requires that the asbestos site clearance certification process must be undertaken by accredited laboratories. In addition to the air-sampling requirement outlined above, the visual inspection procedures should be undertaken by laboratories that can demonstrate compliance with ISO 17020.[28] UKAS will assess compliance with ISO 17020 when assessing asbestos testing laboratories for accreditation to ISO 17025 but ISO 17025 remains the lead standard. Accredited laboratories, and the specific methods covered by accreditation, are listed at www.ukas.com. Further information can be obtained from UKAS.[29]

2.4 Regulation 21 of CAR explains that employers who engage laboratories to analyse asbestos materials must assure themselves that the laboratory conforms to ISO 17025 (ie it is accredited).

2.5 Separate UKAS accreditation for surveying buildings for ACMs under ISO 17020 is also available to laboratories and inspection bodies without a laboratory function. Contact UKAS for more information. In *Asbestos: The survey guide* HSG264, HSE strongly recommends the use of surveying organisations which are accredited.

Organisational competence

2.6 There are activities and procedures that analyst organisations should carry out to demonstrate their competence. Laboratories that analyse air samples should take part, and achieve a satisfactory standard, in an external proficiency testing scheme, eg the Regular Interlaboratory Counting Exchange (RICE)[30] (see Figure 2.1). This requirement is set out in more detail in Appendix 1. The RICE scheme is administered by HSE and is overseen by HSE's Fibre Proficiency Testing Steering Committee (FPTSC). Satisfactory participation in an external proficiency scheme for air and material sampling is also a condition of accreditation.

2.7 The proficiency scheme for the identification of asbestos in materials is called the Asbestos in Materials Scheme (AIMS).[31] This scheme is also administered by HSE and overseen by FPTSC. Participation and maintenance of a satisfactory performance in this scheme are described in Appendix 2 of this guidance.

2.8 Other schemes overseen by HSE include the Asbestos in Soils Scheme (AISS)[32], a scheme for scanning electron microscopy (SEM) fibre counting, and the Low Asbestos Content Scheme (LACS) in bulk materials. Further information and contact details on these proficiency testing schemes can currently be found at the following website: https://www.hsl.gov.uk/proficiency-testing-schemes.

Quality control

2.9 Analysts and surveying organisations should have robust internal quality control and auditing procedures. These are also conditions of UKAS accreditation. Quality control procedures are particularly relevant to analysts' site inspection activities (most of which are subjective in nature and generate reports which are issued without further checking or immediate quality control). Errors and deficiencies in 4-stage clearances have serious public health implications. Accreditation also requires a laboratory to have a documented training and competence procedure which should include an element of supervised laboratory and on-site experience for staff.

2.10 Auditing procedures should be developed for each area of the analyst's work. They should be part of documented performance management for individuals. UKAS require annual auditing of each analyst's performance as a minimum (see also paragraphs 2.14–2.17 for additional requirements).

2.11 Auditing should normally be carried out by a designated 'competent auditor' within the organisation. This person needs to possess a suitable combination of qualifications, training, experience and knowledge for the work.

2.12 Records of analysts' training are required to be kept (Regulation 10). Records of auditing and performance should also be retained and be available for inspection as part of UKAS audits. The information should be used by the analyst organisation to ensure consistency of standards and to identify training needs, operational issues and competence improvements where appropriate. Further guidance on reviewing performance and competence for laboratory-based work can be found in the UKAS document LAB 30.

Monitoring site work

2.13 The Analyst Inspection Programme identified poor practices and standards for some analysts during 4-stage clearances. These included:

- in multiple room enclosures samples were collected only from some rooms;
- some vital equipment was missing (eg brushes were not used to undertake active disturbance and mirrors were not used to aid visual inspection);
- insufficient time was taken to count slides;

- analysts were unshaven, which significantly reduced the protection provided by their respirators;
- progressive and systematic visual inspections were not always carried out;
- analysts moved randomly around enclosures, potentially leading to asbestos dust/debris being missed during visual inspection;
- DCU checks were not carried out to ensure that the unit was operational and ready for use; and
- some transit and waste routes were cluttered but were not challenged.

2.14 These site issues arose from the actions of the individual analyst during the 4-stage clearance. The assessment system relies on analysts operating independently and impartially. It also relies on their performance at each site on each day. The analyst must be properly trained and have the correct equipment. The importance of the employer ensuring satisfactory analyst performance on site cannot be overemphasised. Deficiencies and discrepancies can only be identified by close scrutiny of analyst behaviour, practices and outputs (including documentation) during clearance site work. The findings of the Analyst Inspection Programme highlight the need for significant monitoring, reviewing and supervision of analyst work from the perspective of health and safety as well as management and quality control, to make sure that others (eg subsequent building occupiers) are not put at risk by the actions of poor-performing analysts.

2.15 Analysts should appreciate that there are legal responsibilities and liabilities on them as individuals to ensure their actions or inactions do not affect the health and safety of colleagues and others (Health and Safety at Work etc Act 1974 (Section 7)).

2.16 To ensure continued satisfactory 4-stage clearance performance, analysts' work should be regularly assessed. Assessment can include structured observation and monitoring, feedback from clients and 4-stage clearance results (eg proportion of passes/failures). In addition, a regular programme of on-site auditing (monitoring) including reinspection through joint visits should be carried out. There should be no colluding between the parties. It is recommended that ~5% of all 4-stage clearances undertaken per annum by the analyst organisation are checked and that every analyst is audited on site at least four times per annum (with reasonable intervals in between). Auditing should be thorough and include a 'blind' separate and independent reinspection of stage 2 conducted promptly after the analyst has completed the visual inspection, exercising reasonable judgment about adequate and proportionate time for this. For example, in larger enclosures, a representative proportion of the enclosure should be reinspected. The audit should also confirm whether satisfactory practices and performance were demonstrated. The findings should be recorded with recommendations for any training needs or procedural improvements identified. The items to be checked in the site audit are listed in Table 2.1. The auditing programme should cover a representative range of:

- removed materials (eg sprayed coating, insulation, AIB, wet-blasting);
- premises type (eg domestic, industrial and commercial);
- individual analysts carrying out the clearance inspections.

2.17 In addition to the site auditing/reinspection programme, desktop reviews of at least 5% of completed clearance certificates for reoccupation should be carried out. These desktop reviews need to be conducted by quality assurance managers or other technically competent individuals. The desktop review should check for satisfactory 4-stage clearance site procedures and analytical details. The items to be checked are listed in Table 2.2. The desktop review should also confirm whether satisfactory performance was demonstrated and make recommendations regarding any identified training needs or procedural improvements.

2.18 Issues identified during assessments, monitoring and reviews should be addressed through prompt action. This can include instructing, advising, coaching and demonstrating. In addition, refresher training should also be given where necessary. The quality and consistency of all work carried out should be kept under regular review.

Table 2.1 Site auditing protocol for 4-stage clearances
General Handover form is received and is satisfactory. Site-specific documentation (POW, analyst's risk assessment etc) is present and checked. The correct PPE and RPE are worn. The correct decontamination procedures are followed.
Stage 1 The correct items are checked. Transit and waste routes are thoroughly checked and the correct conclusion is reached (ie free from debris).
Stage 2 Sufficient time has been spent on the thorough visual inspection (in line with the estimate). Any stage 2 issues are dealt with appropriately and recorded. No visible dust is remaining in the reinspection area.* The correct equipment is used for thorough visual inspection (eg access equipment, brush, mirror, lighting, torch).
Stage 3 The correct sampling locations, times and disturbance periods are used. Analysis time is sufficient and in line with *Asbestos: The Analysts' Guide*.
Stage 4 The visual inspection is conducted thoroughly.
Final Sufficient photographic evidence has been provided to meet the guidance and support the conclusions. All documentation has been completed correctly.

*Note: It will be impractical to reinspect all areas in a large or complex enclosure. In these situations, the assessor should reinspect a representative section of the enclosure or work area.

Table 2.2 Desktop review protocol for 4-stage clearances
General Handover form was received and was satisfactory. Site-specific documentation (POW, analyst's risk assessment etc) was checked.
Stage 1 The correct items were checked. Transit and waste routes were checked and the correct conclusion reached (ie photos show they are free from debris).
Stage 2 Sufficient time was spent on the thorough visual inspection (in line with the estimate). Any stage 2 issues were dealt with appropriately and recorded. Any additional cleaning by the licensed contractor is recorded No debris is visible from photos and no dust is referenced in text. The correct equipment was used for thorough visual inspection (eg access equipment, mirror, lighting, brush, torch).
Stage 3 The correct sampling locations, times and disturbance periods were used. Analysis time was sufficient and in line with *Asbestos: The Analysts' Guide*. The number of graticule areas examined was appropriate. The result was correctly and in cases where this stage passed less than 0.01 f/ml.
Stage 4 The visual inspection was satisfactory (eg it took a reasonable time and good photographic evidence was provided).
Final Sufficient photographic evidence has been provided to meet the guidance and support the conclusions. All documentation has been completed correctly and is in order.

3 COMPETENCE AND QUALIFICATIONS

3.1 Employers must make sure that adequate information, instruction and training are given to employees who are liable to be exposed to asbestos (CAR Regulation 10). This is in order to safeguard employees and others. The training also needs to be consolidated by practical experience to ensure sufficient skills and knowledge. The ACOP paragraphs 225–275 set out the requirements when working with asbestos in more detail.

3.2 Analysts must also be technically competent. They should undertake professional development including obtaining qualifications. Eligible analysts can become members of the BOHS FAAM (see paragraph 1.25).

Figure 3.1 Analyst organisational-specific training

3.3 Employers need to establish the functions, roles and duties of each individual analyst within their organisation together with the relevant qualifications, skills and expertise needed (ie the competences for the position) as part of UKAS accreditation. Training needs analysis (TNA) can be used to assess the specific training, development and qualifications required. There will be different needs for different positions and functions within the organisation. Functions may include:

- air and bulk sampling for asbestos;
- laboratory-based analysis of air and bulk samples;
- fibre identification;
- sampling surveys for asbestos;
- clearance of enclosures and DCU facilities;
- interpretation of results and reports;
- management of asbestos work;
- other inspections (eg contaminated land, non-licensed work).

Training and development will normally include the four areas outlined below.

Organisation-related

3.4 This may cover a range of topics associated with an organisation's established working procedures. Such procedures may include site and laboratory documentation, internal quality control samples, proficiency testing schemes, handling of samples, disposal of waste, liaison with clients, preparing and reviewing customer contracts, reports and certificates. It will also include many items associated with ISO 17025 and accreditation.

Health and safety

3.5 The employer needs to provide learning programmes (see Figures 3.1 and 3.2) that cover asbestos and other related health and safety issues. Relevant topics are listed in Table 3.1. These might be either run in-house or outsourced.

Table 3.1 Topics to be covered in analyst development programmes

All staff	Field staff
Awareness training for asbestos in accordance with CAR Regulation 10. This includes the health effects of exposure to asbestos fibre and emergency procedures	Working in confined spaces
Methods to reduce the risk when working with asbestos	Working at heights
Safe handling and use of chemicals	Lone working
Ergonomic issues and requirements	Other hazards (eg risks from old buildings; biological hazards)
Company health and safety policy and procedures	Working in hot environments
	Selection, fitting, wearing and care of RPE
	Use of PPE
	Procedures for entry and exit from enclosures
	Decontamination procedures
	The meaning and interpretation of the control limit and clearance indicator
	Action to take if intimidation, confrontation or inappropriate challenges occur on site

3.6 Analysts who will have to enter enclosures must complete practical training on RPE and decontamination as detailed in Chapters 8 and 9. The training should include the full decontamination process in a DCU.

Figure 3.2 Training in checking respiratory protective equipment

Function-specific

3.7 The accreditation process requires analytical laboratories to demonstrate that their employees are competent. UKAS, the accreditation body, recognises a number of proficiency training modules for this purpose. Much of an analyst's work is technical and complex. It requires individual and specific training covering both theory and practice relevant to the subject area. Currently available proficiency modules include the following:

- asbestos foundation course;
- identification of asbestos in bulk samples;
- building surveys and bulk sampling for asbestos;
- asbestos fibre counting;
- air sampling and clearance testing of asbestos;
- management of asbestos in buildings;
- analyst project management;
- managing asbestos in premises – the dutyholder requirements;
- identification and quantification of asbestos in soils.

3.8 Each proficiency module is a standalone course covering both theory and practical training. Courses usually last 2–3 days. The aim of each module is to provide individuals with the relevant skills and knowledge to enable them to become proficient.

3.9 To ensure this, the modules must cover relevant core competences. Table 3.2 indicates some of the core competences. Greater detail setting out HSE's view of the competences an analyst needs is summarised in Appendix 9. Achievement of competences requires practical assessments as well as a written examination. At the time of writing, there are two providers of proficiency modules: BOHS[33] and RSPH.[26] Both provide a range of proficiency modules (see Table 3.3).

Table 3.2 Core competences recommended for various analysts' proficiencies

Module	Core competences
Foundation material (important for all competences)	■ Know the context and nature of the risk from asbestos to human health and how the risk should be addressed ■ Know the legal requirements, controls and exposure limits, PPE/RPE, site, general and asbestos risk assessment ■ Know lone working, decontamination, disposal and emergency procedures ■ Be able to advise others about selection of competent people
Bulk sampling	■ Taking bulk samples of suspected ACMs while protecting self and others ■ Know the range of ACMs and their likely locations ■ Know methods of work, containment/control, repair, recording and reporting ■ Be able to deal with unsafe conditions
Fibre identification	■ Application of guidance and theory and practice of microscopy for identification of asbestos fibre type. Strengths and weaknesses of methods ■ Laboratory equipment: use, maintenance and controls ■ Handling and preparation of samples, use of the range of tests in HSG248. ACM and fibre discrimination protocols and challenges (eg from non-asbestos fibres) ■ Quality systems, UKAS requirements, AIMS ■ Be able to prepare suitable reports for a range of clients

Module	Core competences
Air sampling – air monitoring/fibre counting	■ Apply the appropriate methods for setting up air monitoring equipment for a range of purposes and count fibres accurately according to the approved protocols ■ Understand common sources of sampling error ■ Prepare samples for counting ■ Count to the appropriate standard (RICE/WHO). Calculate fibre concentrations ■ Understand the range of additional methods such as SEM and TEM ■ Understand the components of and the need for quality assurance systems and revisit analyst's duties under HSW Act 1974 ■ Carry out clearance for reoccupation after removal of ACMs. Understand concept of ALARP (minimising exposure) and relate to clearance work ■ Identify good and poor practice in maintenance and removal work. Practical implications of CAR and CDM roles and requirements for POW, method statements, health and safety files, supervision ■ Detailed knowledge of removal work, plant equipment, methods and assessment, the stages and requirements during stages of 4-stage clearance and handling problems ■ Personal qualities of resilience, determination and integrity when making decisions as to standard of site cleanliness etc ■ Keep and issue records and documentation. ■ Be able to prepare suitable reports for a range of client types and deal with both licensed and non-licensed work
Substantial on-site survey work for the duty to manage asbestos, CAR sampling by an analyst who later identifies fibres in the laboratory (competences in bulk sampling and fibre identification expected)	■ Advise a range of 'duty to manage' dutyholders on their legal responsibilities and ways of meeting them in both management and refurbishment and demolition circumstances. Propose and carry out suitable survey schemes for both purposes based on observation and knowledge of common ACM uses and locations ■ When giving advice or assessing a site apply HSE guidance (eg HSG264) and the principles of relevant UKAS guidance ■ Make appropriate judgements about controls needed for survey work involving licensed and non-licensed materials ■ Understand the range of risk assessment and reporting formats in use and the need to make sure that the client is fully involved in agreeing what the survey report will contain. Make sure the report lays the foundation of any future management actions by the client
Identification and quantification of asbestos in soils (competence in fibre identification expected)	■ Understand and apply the theoretical and practical aspects of the methods involved in asbestos sample identification and quantification in soils

Table 3.3 Examples of asbestos proficiency modules and awards from different course providers

British Occupational Hygiene Society	
P400	Asbestos Survey and Analysis (foundation course)
P401	Identification of Asbestos in Bulk Samples (PLM)
P402	Surveying and Sampling Strategies for Asbestos in Buildings
P402RPT	Report Writing for Asbestos Surveys
P403	Air Sampling and Fibre Counting (PCM)
P404	Clearance Testing and the Requirements for a Certificate for Reoccupation
P405	Management of Asbestos in Buildings
P408	Identification and Quantification of Asbestos in Soils
P409	Strategies and Sampling of Soils for Asbestos (planned publication 2021)
P410	Management of Asbestos Projects by the Analyst (planned publication 2021)

Table 3.3 *continued*

British Occupational Hygiene Society *continued*	
D407	Managing Asbestos in Premises – The Dutyholder Requirements
D412	Senior Management Responsibilities for Managing Asbestos
D413	Asbestos Management Practicalities and Awareness
CoCA	Certificate of Competence in Asbestos
Refresher courses	
RP402	Surveying and Sampling Strategies for Asbestos in Buildings
RP404	Clearance Testing and the Requirements for a Certificate for Reoccupation
RP405	Management of Asbestos in Buildings
Royal Society for Public Health	
RSPH Level 3 Award in Asbestos Bulk Analysis	
RSPH Level 3 Award in Asbestos Surveying	
RSPH Level 3 Award in Asbestos Air Monitoring and Clearance Procedures	
RSPH Level 3 Award in Asbestos Management for Dutyholders	
RSPH Level 4 Certificate in Asbestos Laboratory and Project Management	

3.10 UKAS accreditation requirements for sampling and analysis are set out in the UKAS document LAB 30. At the time of writing UKAS accreditation for air sampling and analysis requires at least one senior member of an accredited laboratory's organisation to be a 'competent' person (eg by holding the BOHS Certificate of Competence in Asbestos, the RSPH Level 4 Certificate in Asbestos Laboratory and Project Management or equivalent). Details of these qualifications can be obtained from the BOHS website (www.bohs.org) and the RSPH website (www.rsph.org.uk).

3.11 Practical experience and on-the-job training carried out under the supervision of an experienced competent analyst are essential in assessing and achieving competent new personnel.

3.12 UKAS accreditation requires that a laboratory has a documented training procedure, including TNA, which should include an element of supervised on-site work. Internal and external quality control (QC) schemes are ideal for assessing competence (ie for the analysis of samples of airborne asbestos fibres and bulk analysis). Other procedures need to be developed in-house for air and bulk sampling. These include site auditing before authorisation is given to carry out the task(s) unsupervised. A new analyst's competence must be confirmed by an appropriate senior laboratory member before they undertake any unsupervised site work.

Ongoing/refresher

3.13 Individual training needs should be assessed and met on an ongoing basis as and when required. It is not necessary to wait for formal 'refresher' dates to address performance issues or identified needs (eg where an experienced analyst has failed to wear appropriate PPE, follow decontamination procedures or record sufficient contextual information when air sampling). Such issues should be addressed by prompt action which can include instructing, advising, coaching and demonstrating. Appropriate intervals for training depend on the nature of training needs and the significance and urgency of the issue. Where repeat issues occur more formal action will be required.

3.14 Analysts should receive refresher asbestos training in line with the requirements of the ACOP. In practice, routine refresher sessions will form part of an organisation's management arrangements. Refresher training should reflect the level of competence and specific training needs of the individual involved and should not be simply a repeat of the initial information, instruction and training. Refresher training should be provided annually for those whose work regularly disturbs asbestos. A record should be kept in the analyst's training file and any gaps identified should be addressed within agreed timescales. For analysts this should include:

- updates on any changes to guidance, ACOPs and regulations;
- sharing and update of good practice and identification of poor practice, particularly in areas of work that are difficult to measure (eg visual inspections, bulk sampling);
- any issues identified through customer feedback, observation, assessment and auditing; and
- reinforcing procedures such as: correct choice of PPE, decontamination arrangements, use of the DCU, use and maintenance of RPE.

3.15 Paragraphs 5.6–5.8 highlight the need to record sufficient contextual information for sampling and analysis. These matters should be monitored and reviewed from a quality control point of view and refresher training given where necessary. There are a number of refresher courses now available (see Table 3.3).

3.16 The quality and consistency of all analyst work should be under continual review. Details for site work are set out in paragraphs 2.16–2.17. For laboratory-based work further guidance on reviewing analyst performance and competence can be found in UKAS document LAB 30.

Part 2: Sampling, analysis and clearance work

4 BULK SAMPLING AND MATERIAL ANALYSIS

Introduction and regulatory requirements

4.1 This chapter summarises the requirements for the sampling and analysis of suspected ACMs. The purpose of bulk sampling is to collect representative samples of suspect asbestos materials. The subsequent analysis is to determine whether asbestos is present, and if so, the type(s). Asbestos sampling may be carried out by analysts or surveyors. Detailed information relating to the methods to be used in the analysis of materials for asbestos can be found in Appendix 2. The water absorption method in Appendix 3 is used (as appropriate) to determine whether the asbestos boards and tiles are classified as materials that require a licence to work on (eg AIB) or as asbestos materials that do not require a licence (eg AC). HSG264 covers sampling strategies and the reporting requirements for surveys in more detail.

4.2 Sampling and analysis of materials for asbestos is primarily carried out to support employers' compliance with CAR. Bulk sampling and analysis is used:

- to determine if work on an ACM requires a licence;
- to identify suspected ACMs to support the duty to manage asbestos under Regulation 4;
- to support compliance with the duty to identify the presence and type of asbestos (under Regulation 5), before any work that is liable to disturb ACMs starts.

As already noted in paragraph 2.3, analysts engaged in the analysis of material to check for asbestos should meet the criteria set out in ISO 17025 and be accredited. Accreditation for bulk sampling is strongly recommended.

4.3 Sampling and analysis of asbestos may also be required under the current CDM Regulations. CDM Regulation 4(4) sets out the client's duties on providing pre-construction information to every designer and contractor appointed (L153). Sampling and analysis of soils for asbestos would be undertaken where, before any soil disturbance, there is a reasonable expectation that asbestos would be present and could present a risk to workers. This is discussed further in paragraphs 7.1–7.2.

4.4 Sampling ACMs can give rise to exposure to asbestos and is subject to CAR. As already highlighted in paragraphs 1.15–1.16, an assessment and a suitable written POW must be prepared. These should make sure that the analyst and others, including building occupants, are not put at risk by the sampling. A generic risk assessment for the process of sampling of ACMs should be supplemented by a site-specific risk assessment with appropriate control measures including PPE and RPE. Sampling of ACMs is, however, usually exempt from the requirements for licensing and non-licensing notifications, health surveillance and medical records (see paragraph 1.12).

Safe systems of work

4.5 When developing a safe system of work, as well as the risks posed by the disturbance of asbestos, other hazards must be taken into account. It is strongly recommended that surveys are carried out by two people working together. Two people are essential where work in confined spaces is involved or when dust control is used (eg shadow vacuuming). Where working at height is

necessary, safe systems of access should be provided. The employer should specify and provide equipment for working at height which complies with the hierarchy of control measures in the current Work at Height Regulations 2005.[34] Some aspects of soil work will also require adequate risk assessments and controls (eg where excavations and/or mechanical plant are involved).

Figure 4.1 Analyst sampling wearing PPE and RPE

4.6 Sampling personnel must wear adequate PPE including RPE (see Figure 4.1). Details of the type of PPE and RPE to be worn and the need for a face-fit test are given in Chapter 8. Fibre emissions should also be adequately controlled (eg by pre-wetting the material to be sampled with water and/or a suitable wetting agent). Shadow vacuuming with a Class H vacuum cleaner meeting BS 8520-3:2009[35] should be used if wetting is likely to be incomplete or inappropriate (eg near live electrical equipment).

4.7 The areas to be sampled inside buildings should be unoccupied during sampling as far as possible, with entry also restricted during this period. The work should be scheduled to minimise disruption to the client's operations. The nature of the area and the likely release of dust will dictate the appropriate precautions required to prevent spread of asbestos. Soil sampling will need fewer restrictions but appropriate PPE and RPE should be worn (see Chapter 8).

Bulk sampling strategies

General

Figure 4.2 Sampling of a floor tile

4.8 Bulk sample(s) should accurately represent the location and the whole material from which it is taken. Examples of bulk sampling are shown in Figures 4.2 and 4.3. In buildings, the extent of the material and any variations or repairs should be assessed and then representative samples of about 3–5cm^2 in size should usually be taken (normally through the entire depth of the suspect material). The samples should be representative of the whole material. Particular attention should be made to ensure that the full inner edge and remote sides of boards are captured (as asbestos paper may be present). Additional samples should be taken from areas where variations or differences are identified. Samples should normally be collected from the less conspicuous areas, or from where it causes least additional damage (eg the edges of tiles, boards and sheets or areas that have already been damaged). (Note: damaged areas may have been patched with different materials, which may or may not contain asbestos.)

Figure 4.3 Sampling of AIB panels

4.9 The sampling strategy will be based on the types of ACM present. Table 4.1 gives general guidance on the sample numbers and locations for sampling for various types of ACMs and scenarios (details on dust and soil sampling are given in paragraphs 4.10–4.14). However, a decision on the appropriate number of samples per location should be made after close inspection of the materials involved. Information on the factors which will affect sampling numbers is presented in paragraphs 4.16–4.20.

Table 4.1 Information and details of sampling strategies for various ACMs

ACM	Comments and sampling strategy
Spray coatings, encapsulated sprays and bulk materials	Often but not always homogeneous/uniform. Where uniform, two samples taken from each end of the sprayed surface will usually be adequate. If the installation is particularly large (eg >100 m^2), one sample should be taken approximately every 25–30 m^2. Samples should be taken from all patches of repairs or alterations.
Pipe/thermal insulation	Often highly variable composition. Variations occur where there are changes in colour, size or texture or in repaired areas. Sample numbers and location depend on the variations and the planned work. Undamaged areas should be sampled first. In general, one sample per 3-m pipe run should be taken with particular attention paid to different layers. For long pipe runs (eg >20 m), one sample per 6 m will usually be adequate. It can be difficult to demonstrate that individual pipes are asbestos-free so all pipes should be sampled even when they appear similar. Valves or hatches or repaired areas near access routes are less likely to contain asbestos but discretionary sampling may be necessary. Samples should be taken from all patches of repairs or alterations.
Insulating board/tiles	Board is usually homogeneous but might have repairs or replacement boards and tiles. One 3–5cm^2 sample per room or every 25 m^2 is usually adequate. If there is clearly more than one panel type then representative samples of each should be taken. When a material is visually consistent with AIB, smaller samples may be sufficient, as the amosite is readily detectable on analysis.
Asbestos cement (AC) materials	Homogeneous materials. Often seen as corrugated and flat sheets or as various moulded products. In older buildings, most pre-formed exterior cement sheets fitted before 1990 are likely to contain asbestos so only limited sampling will be required. The risk from falls through fragile AC roofs may mean that sampling is limited. Also, in many cases, a strong presumption can be made that the material is AC without sampling. This includes AC flues (where sampling damage may lead to the release of harmful gases) but excludes asbestos soffits which should be sampled or presumed to be AIB. If sampling is required, one sample of each type of sheet or product (eg downpipes etc) should be taken.
Other suspect asbestos materials	Where there are distinct types of materials, then one or two samples from each separate source will usually be adequate. Two samples are recommended if there are more than a few square metres of material. Examples of different materials include roofing felts and decorative coatings and plasters. More information is given on sampling decorative coatings in Table 4.2.

ACM	Comments and sampling strategy
Debris	Sampling of debris can be carried out by picking out individual pieces or fragments, which are visually consistent with potential or known ACMs, or have visible fibres. If there is recent damage to an ACM, debris may still be present directly underneath the original source. Debris from the original installation work or due to previous maintenance or removal activities may only be found in the less accessible areas, which are unlikely to have been cleaned (eg loft spaces, floor voids, cable trays, on suspended ceiling tiles or high-level surfaces).
Rocks and minerals	Rocks and minerals may be homogeneous or non-homogeneous in nature. Solid or loose homogeneous materials may be sampled using similar strategies to other homogeneous commercial ACMs.For non-homogeneous rocks and minerals, care should be taken to ensure that the sample(s) is representative. In particular the sample should include examples of different layers, colours etc. and, for example with marble, any mineral veins that are present. The sample should be of sufficient size to include all visible non-homogeneities, where possible.

Dust

4.10 Sampling and analysis of asbestos in settled surface dust is **not** recommended except in specific circumstances where the spread of asbestos from a substantial recent release incident is being investigated (see paragraph 4.12). Dust sampling should not be routine or part of a bulk sampling or survey programme. Sampling is not advised due to the technical difficulties (eg efficiency of collection methods) and surface deposit/settled dust variability (ie representativeness) as well as uncertainties in the statistical relevance and in the assessment and evaluation of risk that arises from the detection of low numbers of fibres.

Figure 4.4 Photograph of a site where dust is likely to be present on high-level surfaces

4.11 Surfaces with low numbers of microscopic fibres in dusts often occur in buildings and the fibres may have been present for many years, particularly on high-level surfaces (see Figure 4.4). The use of surface samples to trigger extensive 'environmental cleaning' or abatement works requires careful evaluation and 'clean-up' will not usually be necessary in the absence of any visible suspicious asbestos debris and fragments. The fibres may not even be asbestos. Assessment of such material requires the use of standardised methods both to identify the fibres (see Appendices 2 and 4) and to collect representative quantitative samples for analysis.

4.12 The collection of dust samples may be useful in specific situations. For example, assessing the recent spread of substantial ACM from poorly controlled maintenance or removal work or an asbestos incident.

4.13 Where dust sampling for asbestos is carried out, results should be interpreted with caution. It is important that valid and reasonable conclusions are reached. The implications of small numbers of asbestos fibres in dust are quite different from the presence of visible asbestos debris and fragments. Occasional random asbestos fibres in settled dust cannot be considered to represent 'widespread or significant' contamination and should not be reported as such. Overstated claims and imprecise reporting may lead to undue anxiety for the client and occupants.

Soil and made ground

4.14 Asbestos in soil and made ground is likely to be variable and unpredictable. Samples may consist of ACM debris and asbestos fibres surrounded and encased in soil and may be mixed in with vegetation, stones, bricks, crushed building rubble and other materials. Obtaining a representative sample can be very difficult. The sampling strategy needs to be carefully designed to meet the purpose of the survey. The aim of sampling in a health and safety context is to establish where asbestos is present on the site so that the correct precautions can be applied to protect workers and others when the work is carried out. More details are given in Chapter 7 and Appendix 7.

Number of samples

4.15 The guidance in these paragraphs covers:

- 'simple' sampling situations where, for example, only one or a few samples will be taken if the client needs confirmation only of specific identified materials and the analyst is likely to be directed to the materials of interest;
- more comprehensive or survey situations where the analyst will have discretion to search for suspect materials.

Some information on sampling criteria and numbers is contained within paragraphs 4.16–4.19 but the reader is directed to HSG264 for detailed information on building surveys and associated sampling. However, this document (ie HSG248) includes survey guidance on asbestos in soils and made ground that is not available in the current version of HSG264.

4.16 The number of samples collected at any location (whether as a single-sample investigation or as part of a building survey) will depend on the nature and extent of the material present and the degree of variation within the material. Variability can be due to differences in, for example, repaired/damaged areas, colour/shade, surface texture/roughness, sound emitted on knocking, depth, temperature and coating. In most cases the normal starting point will be a visual examination and assessment to check the extent and consistency of the material or product. Adequate lighting is essential to make sure that a valid visual inspection can be made. Sample numbers should reflect the quantity/size and the extent of variation within the material or product.

4.17 One sample may be sufficient in many cases (eg with consistent/uniform material) but more samples will be necessary where items are clearly dissimilar (eg see paragraph 4.16). Areas with signs of repair or replacement will not be representative of the main material (eg they may be more recent non-asbestos replacements) and sampling will have to take this into account. Details on sample numbers for different materials are given in Table 4.1.

4.18 The numbers of samples collected in surveys of soils and made ground will be site-specific and depend on the objectives of the survey and other factors including the source/s of the asbestos, the area and layout of the site and the extent of any physical spread. A suitable site

sampling strategy will need to be developed. The survey may have to take samples from several depths in the soil and made ground as well as from the surface (the design strategy can be complex). More sampling may be required where the site history is incomplete or limited.

4.19 In all sampling situations the number of samples collected should be based on the nature and complexity of the premises, location, site circumstances and conditions and the professional judgement of the analyst/surveyor after discussion with the client. Sample numbers should not be restricted due to cost or contractual arrangements if this may lead to insufficient or unrepresentative sampling or erroneous assumptions. Sample numbers should also not be inflated. Where necessary, access arrangements should be made to ensure all appropriate areas and locations are sampled as far as reasonably practicable.

Procedures

4.20 Surfaces onto which asbestos debris may fall should be protected with a sheet of impervious material such as polythene to prevent the spread of contamination and for easier clean-up. This is an important control measure and applies, where practical, for most sample collection. As ACMs are defined as any material containing any asbestos above trace amounts (see paragraph A2.30 and Box A2.1), it is vital that any cross-contamination between samples is avoided by adopting careful procedures and ensuring that any sampling equipment is thoroughly cleaned before reuse. After sampling, all samples must be individually sealed in their own uniquely labelled container, which is then sealed in its own second container (eg a polythene bag). Further information on labelling, packaging and transportation of asbestos samples is given in Appendix 2, paragraphs A2.82–A2.83.

4.21 Once sampling has been completed, the sample area should be 'made good', ie left clean with no evidence of debris from the sampling operation. Sampling points should also be sealed to prevent the release of fibres. A variety of methods are used to reseal the sampling point (eg tapes, fillers, encapsulants). The method used should be pre-agreed with the client and be appropriate, long-lasting and effective. Note that foam sealants can be flammable and may breach fire regulations. Note also that clean-up will be impractical in soil sampling.

4.22 The client should be informed where sampling cannot be conducted (eg no access or dangerous, eg live electrics, area unstable etc). The client should also be made aware of situations which could prejudice the sampling organisation (eg the area is already contaminated with asbestos debris so it is not reasonable to expect the sampling organisation to leave the area clean, or the surface is badly damaged or of a type which is difficult to seal).

Sample and site labelling

4.23 Whenever a sample is collected its unique ID label should also be recorded in any associated documentation, so that the sample origin can be traced at a later date. The sampling position at the site may also be labelled with the same identifier.

Labelling and packaging of samples sent for analysis

4.24 Samples should be correctly labelled in accordance with CAR Regulation 24. More information is given in paragraphs A2.82–A2.83. Samples sent by post or courier should always be presented, packaged and labelled in full compliance with the chosen carrier's detailed procedures and requirements.

Methods

4.25 Information and details of bulk sampling methods for various ACMs are presented in Table 4.2.

Table 4.2 Information and details of bulk sampling methods for various ACMs

ACM	Comments and bulk sampling method
Spray coatings, encapsulated sprays and bulk materials	If the coating is totally encapsulated, it can be preinjected with liquid around the sampling area, then carefully cut with a sharp knife or scalpel to lift a small flap to obtain a sample. Damaged areas of encapsulated spray insulation can be accessed more easily but should be avoided if the area shows signs of previous repair. If the spray coating is uncovered, both wetting and shadow vacuuming may be necessary to reduce airborne emissions. As spray coatings are usually homogeneous, a surface sample, which will cause little disturbance, should suffice. However, in some circumstances sprayed coatings can be formed of layers and core sampling may be needed. Sprayed coatings may also have been applied onto bituminous materials or to the underside of AIB.
Pipe/thermal insulation	Where practicable, the sampling area should be wetted first (eg using hand sprays or injection techniques). Precautions to avoid the spread of asbestos debris should be taken (eg a Class H vacuum cleaner inlet or plastic bag held just below the area being sampled, with plastic sheeting on the floor beneath). Samples are taken with a core sampler, which should penetrate to the full depth of the pipe insulation (see Figure 4.5). Proprietary core samplers are available, which include caps or plugs to seal the ends of the tube. The core tube should be withdrawn through a 'wet wipe' and then sealed at both ends and placed in a labelled bag for transport back to the laboratory. Temporary plugs can also be made with 'wet wipes' by placing a wipe inside the tube before sampling and placing the external wet wipe in the sampling end after it has been withdrawn. The sample point hole should be made safe after sampling using an agreed method (assuming that the pipe is to remain in place and the surface was originally intact). This helps to keep the insulation in good condition and to prevent the dispersal of asbestos. Where there is pipe insulation that is obviously new and non-asbestos, the possibility of debris from an earlier asbestos strip beneath the new insulation may need to be investigated.
AIB tiles	For ceiling tiles or wall panels, samples should be taken from areas of existing damage where possible. Otherwise a small sample should be taken from a discreet location at the corner or edge of the panel, with a sharp knife, chisel blade to lever off a sample, or a wet wipe in the jaws of smooth-jawed pliers. The area to be sampled (if remote from any live electrical sources) should be wetted before sampling using a hand spray with a suitable wetting agent. Insulating boards may occasionally have been manufactured with asbestos paper on one or both sides.
AC materials	AC is usually very hard and it is preferable to seek a damaged portion where it will be easier to remove a small sample. The sample size should be sufficiently large (at least 5 cm^2 or 9 cm^2 where the water absorption test is required) to allow the analyst to search for traces of amphibole asbestos such as amosite and/or crocidolite. The sample should be obtained using a sharp chisel to remove a small section from an edge or corner. (Samples should not be collected from roofs without special safety precautions to prevent falls through the fragile sheets.)
Gaskets, rope, seals, paper, felt and textiles	The material should be wetted. Samples can be taken using a sharp knife to cut a representative portion from the material.
Floor and wall coverings	Samples should be cut out with a sharp knife ensuring that any applied adhesive or bitumen is included (as two separate samples where possible). It is usual to take one sample from tiles of each type or colour present. The fibre release is likely to be very low, unless the asbestos is present as a lining or backing material.
Textured decorative coatings	Samples should be obtained by carefully prising off flakes of the coating and/or backing material, using a scraper or chisel. If a scraper or chisel is applied directly to an uneven or rough surface such as concrete, the removal of flakes will be difficult. It may be necessary to scrape the coating with a sharp chisel to direct the material into a sample container held below the sampling point. As asbestos may not be uniformly present in the coating and the coating is usually thin, an area of at least 20 cm^2 should be collected. It is important that wherever possible areas of thicker material and/or ridges are included in the sample. A minimum of two separate samples per surface (wall or ceiling) or, for large areas, one sample per 25 m^2 should be taken. Repaired or visibly different areas should also be sampled. Asbestos fibres are often obscure or difficult to identify/locate in this material and are incorrectly reported as non-detected. Particular care and at least 10 minutes should be taken in the analysis in the laboratory. Note: Also check what the coating has been applied to – it could be AIB.

ACM	Comments and bulk sampling method
Debris samples	Small fragments of debris released due to damage to ACMs or poor cleaning after removal of ACMs can be picked up with a smooth pair of tweezers and placed directly into a sealable container or plastic bag.
Dust samples	Dust sampling is not advised except in very specific situations (see paragraphs 4.10–4.13). Dust can be a variable material so bulk dust samples for asbestos analysis should usually comprise a significant amount of loose dust (approximately one tablespoon is ideal; debris should be excluded). Dust samples can be collected by various methods including scraping the dust layer into a pile and transferring it into a suitable labelled container, micro-vacuuming or using a plastic bag inverted over the hand to wipe over a representative area of surface. Dust samples should **not** be collected as wipe samples on adhesive tapes or filters, as the types of asbestos present can be difficult to identify using the standard procedures described in Appendix 2. For dust samples, an enhanced examination of the sample is needed with the analyst methodically searching through the sample using a stereo-microscope.
Soil and made ground samples	The size range of the ACMs that may need to be analysed (using Appendix 2) can vary from whole sheets of AC to individual microscopic fibres (ie a few square metres (m^2) to a few square micrometres (μm^2)). If a large size range of ACMs is present it is not possible to get a representative sub-sample by coning and quartering or a similar method. Often a two-stage sampling process is needed to assess both the visible pieces of suspected ACMs (using the same procedures as for samples of ACMs in buildings) and the soil matrix (using an enhanced search analysis similar to that required for dust samples). In practice the size separation may be done on site by careful examination and picking of the area or volume of the sample unit. Sieving may also be used to separate the coarse fraction but detailed procedures to decontaminate the sieve between samples are required to prevent cross-contamination. For identification of larger pieces of ACMs, representative samples of about 3–5cm^2 can be collected and analysed in the normal way, with additional cleaning as necessary. Smaller pieces of debris and fibre bundles can also be removed from the soil matrix for analysis. Smaller fragments of AIB are also picked during the initial visual or stereo-microscope search of the sample in the laboratory. Again in some soil types (eg clay) additional cleaning of the fragments and fibres will be required.

Notes:

(i) Sample collection may cause spread of dust and debris, so as well as using dust suppression or capture measures, surface areas around sampling locations should be protected (eg by using plastic sheeting) where practicable.

(ii) Sampling may introduce other risks which will need to be addressed (eg pipe lagging on live steam pipes; gaskets on live pipes which may cause leakage on sampling).

Records and reporting of sampling

Figure 4.5 Analyst taking a core sample

4.26 The sampling records and report should, where applicable, include the following as a minimum:

- name and address of the sampling organisation;
- name/s of sampler/s and report authoriser;
- address of the site sampled;
- contact details at site;
- date/s the sample/s were taken;
- sample collection method (and strategy);
- diagram/map of the site with details of the areas sampled and the sample locations clearly marked;
- 'the depth from which the sample was taken (soils and made ground);
- type of material sampled (eg AIB, lagging, ceiling tile);
- sample type (eg core, scrape, corner piece);
- reasons for collecting any samples smaller than the recommended size;
- other visual records (eg photographs/videos);

- the result for each sample collected, including whether asbestos is present and the type (if possible for soils);
- an assessment of the amount of asbestos product present (if made and where practical; eg building surveys).

4.27 The sampling position and the location of the ACMs can be effectively recorded on marked-up plans or a diagram. Marked-up plans provide much clearer information on the sampling location. In addition, photographs can show the material sampled, the exact sampling location and the surrounding environment. Photographs also provide details of the sampling context.

4.28 Appendix 2 explains the method used to examine the samples and to identify the type of asbestos present, together with guidance on record keeping and reporting.

Bulk sampling of stone materials (with small proportions of asbestos)

4.29 Certain rocks and minerals can contain small amounts of naturally occurring asbestos. These materials include some sources of dolomite, basalt, soapstone, talc, marble and vermiculite. Rock and mineral products may be homogeneous or non-homogeneous in nature. Solid or loose homogeneous materials may be sampled using similar strategies to other homogeneous commercial ACMs. For non-homogeneous rock and mineral materials, care should be taken to ensure that the sample(s) is representative. In particular the sample should include examples of different layers, colours etc. and, for example with marble, any mineral veins that are present. The sample should be of sufficient size to include all visible features or characteristics where possible (more information on the analysis of asbestos in marble and other stone is available).[36]

5 MEASUREMENT OF AIRBORNE FIBRE CONCENTRATIONS

Introduction and regulatory requirements

5.1 Measurement of the airborne fibre concentration is a statutory requirement under CAR. The regulations set out requirements for 'personal' sampling and ACOP L143 specifies circumstances/situations for 'static' sampling. The sampling referred to involves the collection of particulates from a measured volume of air by drawing the air through a suitable filter using a pump. The filter is examined by light microscopy over a known area and the number of airborne fibres determined. The quantitative measurement of the fibres present is referred to as the airborne respirable fibre concentration. Personal and static sampling methods are set out in detail in Appendix 1.

5.2 Personal sampling of employees is required under Regulation 19 unless exposure is not liable to exceed the control limit. Where monitoring is required it should cover a representative range of jobs and work methods (but particularly higher-hazard/-risk activities) and it should be performed at regular intervals. In personal sampling the filter is mounted on the person close to their breathing zone (see Figure 5.1).

5.3 Static sampling involves monitoring the air at one or more fixed sites or locations for various reasons, eg to assess a source or potential spread or to assess the extent of control and containment of asbestos in particular situations (eg leak testing). Static sampling is also a fundamental component of clearance procedures after licensed removal work.

5.4 The traditional method of air monitoring and analysis was developed to assess activities with strong sources of airborne asbestos fibre emissions when it could be assumed that the majority of fibres counted were asbestos. However, in many current sampling situations, there is no direct work with asbestos and other fibre types may be present. In these circumstances, the contribution of non-asbestos fibres will need to be recognised. Therefore, it is essential that sufficient detailed information is collected on the activities, circumstances and conditions at the time of the sampling (ie contextual information) to make sure that appropriate interpretation and conclusions can be drawn. The limitations of the method in particular applications are outlined in paragraphs 5.18–5.22.

Personal sampling

5.5 Personal sampling is carried out to:

- check employees' airborne exposure to asbestos;
- confirm the adequacy of controls and RPE (ie whether the RPE chosen provides the appropriate degree of protection);
- establish employee exposure records;
- support current and future risk assessments.

Figure 5.1 Removal worker wearing a personal pump

5.6 The fibre concentrations obtained in personal sampling should reflect the nature of the work performed and the circumstances and conditions at the time of sampling. It is essential that the analyst collects accurate information on:

- the tasks performed by the worker during sampling (including task duration if possible);
- the other factors that will influence exposure, including how the tasks were performed (eg tools, equipment, methods and techniques);
- the controls that were employed.

5.7 The sampling period should be sufficient to make sure it is fully representative of the work. Sampling periods should normally be for the duration of the enclosure shift (eg 2–3 hours or more) to allow comparison with the control limit or for the duration of a specific task for shorter-duration activities. A minimum sample time of 10 minutes is required to assess the STEL. Sequential sampling may be needed in high-dust environments to prevent the filters becoming overloaded and uncountable. Sequential sampling of short-duration activities can also be used to measure the shift average. Details on how to calculate time-weighted average results and how to compare results with the control limit are presented in Appendix 1 (Box A1.2).

5.8 ACOP L143 (paragraph 482) specifies the information that should be collected during airborne sampling. This information provides a contextual basis for the results. The information to be collected for personal sampling is listed in the personal monitoring template in Appendix 6 A6.3. These details will form part of the sampling analytical report which is outlined in Table A1.1 in Appendix 1.

5.9 Workers actively removing or disturbing the asbestos should be preferentially selected for sampling as fibre concentrations are more likely to exceed the control limit. Analysts should keep a detailed record of the work undertaken by monitoring individuals' movements and tasks through viewing panels or CCTV and through discussion with the operative. These details are essential to allow meaningful interpretation of the sampling results. Analysts and their clients will need to make sure that sufficient resources are employed to enable the analyst to collect the relevant information (ie that the analyst has sufficient time on site and there are a sufficient number of analysts). **Failure to collect the information specified in Appendix 6 A6.3 may prevent the licensed contractor from recording the necessary details on employee exposure as specified in the ACOP.**

5.10 Analyst organisations should carry out periodic personal sampling on analysts (as employees) to make sure that their work practices and controls are adequate and to support future risk assessments. Sampling will be appropriate when:

- carrying out thorough visual inspection and air monitoring inside enclosures during 4-stage clearance procedures;
- collecting bulk samples including soils;
- entering 'live' enclosures for any reason.

5.11 Sampling results can be used for QC purposes and as part of risk assessment discussions. High results (eg near to or above the control limit) should be investigated by employers to evaluate work practices and controls. A summary of any personal air monitoring results should be retained for five years (as required under Regulation 19) and monitoring results should be made available to the individuals involved.

Static sampling

5.12 Static sampling is widely undertaken to assist in assessing the extent and spread of asbestos (see Figure 5.2). The main types and circumstances for static sampling are summarised below and each category is discussed further in paragraphs 5.33–5.55. Static sampling may be carried out for a number of reasons and the purpose should be clearly identified. The various types of static sampling are set out in Table 5.1.

When sampling/monitoring is not necessary

5.13 Airborne sampling is essential in many situations. However, there may be some circumstances when it is not required. These include the following:

Figure 5.2 Static sampling

- where there are good reasons for expecting that the exposures will be very low and well below the control limit;
- during the 4-stage clearance procedures where the removal work has been performed externally without a full enclosure (eg removal of asbestos from soils; soffit removal with a partial enclosure; and in the exceptional circumstances where a full enclosure has not been used for internal work);
- where the work is a single event of such short duration/low emission that suitable monitoring results could not be obtained in the sampling time (ie the detection limit is more than the control limit);
- where adequate information (eg personal sampling data for similar work) is already available to enable the appropriate RPE to be provided; and
- where the RPE provided is of such a high standard relative to the known exposure for the work performed that no foreseeable measurement result could indicate a need for equipment of a higher standard.

Table 5.1 Types and purposes of static sampling

Type of static sampling	Purpose of sampling
Clearance sampling	Part of the 4-stage clearance process (stage 3) on completion of licensed asbestos removal work (see paragraphs 5.37–5.41).
Background sampling	To establish the prevailing fibre concentration. This is often carried out before an activity which may lead to airborne asbestos contamination. Background sampling gives a useful baseline with which other samples can be compared (eg leak and reassurance samples). The prevailing conditions may also need to be stated (eg whether the building or area is in normal use (occupied) or unoccupied) (see paragraphs 5.47–5.51).
Leak testing	To assess the integrity of the asbestos enclosure to make sure it remains intact and that airborne fibres do not escape. These samples are typically taken by the on-site analyst to confirm that fibre concentrations outside the enclosure are not too high (see paragraphs 5.42–5.46).
Reassurance sampling	Conducted in certain circumstances (eg after removal work) to confirm that the residual fibre concentrations are not elevated. There should be no suspicious visible dust or debris (see paragraphs 5.47–5.51).
Near-source static sampling	To assess the release and spread of asbestos fibre concentrations near sources (eg inside enclosures, work without an enclosure, near simulated disturbance activities in unoccupied areas, buildings and enclosures to represent typical release scenarios for normal occupation or maintenance activities, disturbance of asbestos in soil and made ground, or mineral processing etc) (see paragraphs 5.52–5.53).
Far-source/perimeter sampling	Conducted around the perimeter of the site where there may be other workers, public access or residential and commercial buildings (see paragraphs 5.54–5.55).

Air sampling and analysis by phase contrast microscopy

5.14 This is the standard method used to sample and count fibres in air (see Figure 5.3). Air sampling involves drawing air at a known flow rate through a filter for a measured time, so that airborne particles are collected. The filter is then mounted on a glass slide and rendered transparent for microscopy examination. A known fraction of the filtered deposit is examined using phase contrast microscopy (PCM) of at least 500x magnification, to count all fibres seen (particles >5 µm long, <3 µm wide and a length to width (aspect ratio) of >3:1) in a known number of microscope graticule areas. The fibre concentration (in terms of fibres per millilitre of air (f/ml)) is determined by dividing the total number of fibres collected on the exposed area of the filter by the volume of air sampled. The method for the calculation of the fibre concentration (C) in fibres per millilitre is shown in Equation 1:

$C = 1000\ N D^2 / V n d^2$ (Equation 1)

Where: N is the number of fibres counted;
n is the number of graticule areas examined;
D (mm) is the diameter of the exposed filter area;
d (µm) is the diameter of the Walton-Beckett graticule;
V (litres) is the volume of air sampled through the filter.

5.15 In principle, the terms n, D, d, and V in Equation 1 can be varied to increase the sensitivity of the analysis but in practice there are a number of practical limitations and regulatory requirements that restrict the variations that can be applied. Although 'n' (ie the number of filter graticule areas examined) can be increased during the analysis, the occurrence of blank PCM fibre count and counter fatigue means that it is often a better strategy to adjust the volume of air sampled to give an appropriate filter loading.

Figure 5.3 Analyst carrying out analysis by phase contrast microscopy in a mobile laboratory

5.16 Analysts should also take account of the sampling context and the potential for overloading or occlusion of the filters. In particular, for residues, the use of wire brushing and wet blasting equipment or other similar situation has the potential to give rise to high concentrations of non-asbestos dust, which will overload the filter. In these situations, sampling strategies and sampling periods/volumes may have to be substantially reduced to ensure readable filters (eg several sequential samples rather than one single sample) or indirect sampling preparation will be required (eg analysis by analytical TEM using the indirect ISO 13794 method).

5.17 In addition, excessive moisture in the air from the use of wet blasting removal methods may affect the efficiency of sample collection, which could lead to underestimates of fibre concentrations.

Use and limitations of PCM

5.18 The PCM membrane filter method was initially developed to measure the exposure of industrial asbestos workers. Its purpose was to provide an index of exposure which could be used to better assess the workers' exposure and the effectiveness of the controls. Limits were set by regulatory authorities with the aim of reducing the incidence of work-related asbestos diseases. These limits have been progressively reduced over time (by some 2 orders of magnitude) and the scope of the PCM method use has been increased to include static, background and other types of low release and exposure scenarios for even lower concentrations. These changes have meant that the limitations of the PCM method have become more evident and should be taken into account when planning sampling and interpreting the results.

5.19 The PCM membrane filter method does not have the capability to identify asbestos fibres specifically and, therefore, the fibre count will include other types of fibre and elongated particles that meet the shape and size criteria (eg organic, machine-made mineral fibres (MMMF); mineral cleavage fragments). This is relatively unimportant for monitoring workers in the licensed removal industry (or historically in the manufacturing industry). However, as the method is now used for monitoring other situations where there is no current and nearby work being carried out on ACMs, the PCM fibre count is increasingly unlikely to be representative of the asbestos fibre concentration. **In these situations, the PCM result could be interpreted as the upper limit of the airborne asbestos fibre concentration. However, if no asbestos fibres are present and an assumption is made that all identified fibres are asbestos, this will lead to gross misinterpretation and incorrect conclusions and actions.**

5.20 PCM limitations become particularly important at low concentrations including those below the limit of quantification (LOQ) (<20 fibres counted), and for background and reassurance samples. In these situations, unmounted duplicate (or half-filters) should be retained for further analysis (see Appendices 4 and 8) if the PCM fibre concentrations obtained suggest elevated levels. When an asbestos incident has occurred, the greater the time interval between the incident and air sampling, the less representative the PCM result will be of the asbestos release, as fibres will have been readily dispersed and diluted in normal air currents. **In these situations, it should not be assumed that all the PCM fibre counts are asbestos fibres.** It is also worth emphasising that disturbance air sampling is not advised where visible dust and debris are present, unless appropriate containment is still in place. Surface material should be cleaned up first, whenever practicable.

5.21 In situations where significant other (non-asbestos) fibres may also be present, more sophisticated methods of analysis will be needed to determine the asbestos fibre concentration (see Appendix 4). As this cannot be done once the filter is mounted for PCM analysis, it is recommended that in situations where the actual asbestos concentration will be needed (eg outside asbestos enclosures or to establish background or current levels), the filter (after sampling) is carefully cut in half and a half-filter retained or, alternatively, that duplicate samples are taken. The remaining (unused) filter material can be kept and analysed for the asbestos fibre concentration, if necessary. Only electron microscopy analysis can determine the proportion of the PCM fibre counts that are asbestos fibres, but there are some additional light microscopy methods where the optical properties of fibres of >0.8 µm width can be used to exclude them from the count of possible asbestos fibres (eg MMVF fibres are isotropic).

5.22 There are several other limitations when applying the PCM method which may affect the result and decrease the precision. These include:

- Some types and batches of membrane filters can give high background counts on blank filters.
- If too many particles are sampled on the filter it will prevent or bias the fibre count.
- There is significant moisture in the air being sampled (eg from wet blasting removal methods).
- Fibre counting is subject to human error and fatigue.
- The visibility of fibres depends on a number of variables.
- The performance of sampling and analytical equipment.
- Fibre counting has poor statistical precision especially for low numbers of fibres.
- The PCM does not count all the fibres sampled; it cannot readily detect fibres <0.2 µm in width.
- In mining and quarrying, the relatively small (>3:1) aspect ratio used to define a fibre will allow many elongated mineral fragments to be counted.

5.23 Strategies and procedures have been introduced along with quality assurance and controls to minimise the effects of some of these limitations on the fibre count.

Sampling strategies including the statutory measurement method for the control limit

5.24 Personal air sampling carried out to check compliance with the current 4-hour control limit (ie 0.1 f/ml for all asbestos types; CAR, Regulation 2) must use the method based on the WHO recommended method[37] as required in CAR. The current method stipulates a specific airflow rate and is set out in Appendix 1. No other method has been approved at the time of publication.

5.25 Sampling flow rate flexibility is allowed when personal sampling is carried out for other reasons, eg comparison with the 10-minute short-term exposure limit (STEL) (currently set at 0.6 f/ml, see ACOP L143) (for assessing whether a personal exposure is sporadic and low intensity), for assessing short-duration activities and for assessing the suitability of RPE. Table 5.2 summarises the recommended sampling parameters for different types of air sampling.

5.26 Modifications to the approved method are also permissible for static sampling. When airborne sampling results are needed very quickly (eg in leak testing and enclosure checking) the method can be modified, and increased flow rates can be used, increased numbers of graticule areas can be counted and fibre discrimination techniques can be employed (see Appendices 4 and 8).

5.27 The method in Appendix 1 can interpret airborne fibre concentrations from the LOQ (based on a count of 20 fibres) up to a concentration of 100 f/ml. To achieve good precision, the sampling strategy should aim to achieve the optimum fibre density on the filter of 100–650 f/mm^2. The upper density limit of the range may be extended to 1000 f/mm^2, if few interfering particles are present, but may need to be reduced where substantial numbers of non-fibrous particles or agglomerates are present. However, at higher fibre densities (>650 f/mm^2), there is increased undercounting by the analyst and results will underestimate the fibre concentration.

5.28 Static sample air volumes can be varied to make sure that the density of the collected dust deposit is suitable for counting and/or that an adequate analytical sensitivity and LOQ can be achieved (see Appendix 1 for details). Variations in the background count from different batches of blank filters is one of the main factors that determine the LOQ. For practical purposes the LOQ is based on a PCM count of 20 fibres to make sure that the sampled fibre concentration is significantly greater than the blank filter count. Where the analytical sensitivity is based on <20 fibres, the contribution of fibre counts from the blank (unused) membrane filters becomes increasingly important. Field and laboratory blank filter data or data from similar nearby samples will need to be obtained, to interpret the significance of these low PCM counts.

5.29 Appendix 1 of this guidance gives details of the sampling technique and equipment to be used to collect samples for analysis. Appendix 8 also gives further information for outdoor air sampling and for improving the analytical sensitivity and the LOD.

5.30 Table 5.2 sets out the recommended sample flow rates and the **minimum** volumes of air to be sampled and the number of graticule areas to be examined when carrying out the most common types of PCM air tests. For samples with large numbers of fibres, stopping rules allow counts to be terminated after 100 fibres (200 ends) have been counted, provided at least 20 graticule areas have been assessed.

5.31 In situations where significant non-asbestos dust is being generated, sample air volumes will need to be reduced to obtain countable samples. A series of sequential samples taken for shorter times and/or lower flow rates may be the only ways to collect countable samples. The use and need for these and any other strategies adopted will need to be highlighted in the report, and the likely effects and biases on the results discussed.

5.32 The more remote (in time and distance) and/or the weaker the original source of asbestos the greater necessity for increased sensitivity to detect airborne fibres (eg using a combination of longer sampling times and increased flow rates). When sampling distant or weak sources and low fibre concentrations, the proportion of non-asbestos fibres present is likely to become significant. This should be taken into account in the interpretation of the results (eg an assumption that all fibres counted are asbestos will not be valid).

Sampling types

Personal sampling for compliance under CAR, for specific short-duration activities and to assess respiratory protection

Figure 5.4 Personal sampler head

5.33 The conductive cowled filter holder should point downwards and be fixed to the worker's coverall as close to the mouth and nose as practicable and preferably within 200 mm. Due regard should be given to localised concentrations: in such cases, the sampling head should be positioned on the side expected to give the higher result. If a respirator is worn, the sampling head should be positioned away from the clean air exhaust. Consideration should also be given as to whether the wearer is right or left-handed. An example of a conductive cowl sampling head for personal sampling is shown in Figure 5.4.

Table 5.2 Recommended sampling parameters (flow rates, minimum volumes and graticule areas examined and associated LOQ) for different types of air sampling

Application	Sampling rate (litres/min)	Minimum volume of air to be sampled onto 25 mm diameter filter (litres)	Minimum number of graticule areas to be examined	Calculated airborne concentration at the LOQ (20 fibres counted) (f/ml)
Personal sampling				
4-hour control limit	1–2	240	100	0.04
10-minute short-term exposure limit	4	40	100	0.24
Specific short-duration activities[1]	2–4	120	100	0.08
Assessment of suitability of RPE[2]	>0.2–4	40	100	0.24
Static sampling				
Clearance indicator[3]	0.5–16	480	200	0.010
Background[4]				
Leak[4]				
Reassurance[4]				
Near source[4]				
Far source/perimeter[4]	0.5–16	960	200	0.005

Notes

1 Higher flow rates (eg 4 litres/min*) can be used to measure airborne fibres for the duration of specific tasks or activities. (*Even higher rates may be available in the future as personal pump technology develops.) The minimum sampling time should be at least 30 minutes. Longer periods can be sampled. A series of specific short-duration samples can be taken to assess several tasks during a shift. The sampling parameters selected should ensure that the calculated airborne concentration at the LOQ (20 fibres counted) is 0.08 f/ml or less.

2 The flow rate used will reflect the type of task being undertaken. For analysts in particular, dust disturbance activities have the potential to produce the highest concentration and a short-term high-volume sample may be appropriate.

3 This is the minimum requirement for the volume of air sampled and variations in the sampling and laboratory equipment may require >200 graticule areas to be counted to achieve a LOQ of <0.010 f/ml (in most circumstances a volume of >505 litres should avoid the need for >200 graticule areas to be analysed to report a result of <LOQ).

4 In low-dust environments samples of up to 2400 litres can be collected (assuming a ~380 mm^2 exposed filter area) which will give an LOQ of 0.002 f/ml based on 200 graticule areas examined. Other combinations of volume collected and graticule areas counted can also be used to achieve a similar LOQ. However, background samples in occupied buildings may give PCM fibre concentrations around this value from non-asbestos fibres and confirmation of the asbestos fibres using discriminatory methods will be required (see Appendix 4). (Note: for long-duration sampling, periodic checking and adjustment of flow rate will be needed; see Box A1.1.)

Sampling when energetic wet blasting cleaning methods are used

5.34 Wet blasting methods are occasionally used to remove stubborn residual material or remnants such as from previous incomplete asbestos removals. These energetic methods can generate significant airborne dust, which can lead to unreadable/uncountable filters using PCM analysis. Consequently different strategies may be required to obtain countable filters. Sampling and analysis strategies include:

- A series of short-term samples at a flow rate at or below 1 l/minute at the same sampling point can be taken and a time-weighted average calculated (see Appendix 1).
- Analysis of overloaded filters can be attempted by an indirect method of preparation of the filter (see Appendix 4) but the sample preparation will increase the number of asbestos fibres counted if bundles and loose agglomerates of fibres are present. Therefore this method should be used only when resampling is not possible.
- If PCM analysis is going to be attempted, the filter should be cut in half before mounting a half filter for PCM analysis so that indirect preparation and/or fibre discrimination can be performed if required.

Static sampling

5.35 Static sampling may be undertaken for a number of reasons including assessing leak and background concentrations, as illustrated in Table 5.1. The purpose of the static sampling will define the strategy used and the number and position of the samples collected. Workers who are actively disturbing asbestos will generally do so close to their breathing zone, so personal sampling usually gives higher results than static samples. Where there is a clearly defined source, near-source sampling will give information on the strength of the emission source. As the sampler is moved further away from the emission source, further mixing and dilution of the air will occur and the measured concentration will decrease.

5.36 In situations where the location of the emission source is uncertain or diffuse, or the purpose is to measure the average exposure of the occupants, single or multiple samples may be taken. Samples should be taken in positions that are representative of normal occupation. In larger rooms and outside, samples may be collected at specified distances and directions from the source, to assess the spread or dilution of the emission. Static samples should normally be taken at a height between 1 and 2 metres above ground level (to reflect human exposure) using a downward-facing conductive cowl. The time of sampling and the flow rate will be selected to represent specific circumstances and several common static sampling strategies are described in paragraphs 5.37–5.54.

Sampling during the four-stage clearance procedure at licensed asbestos removal sites

5.37 Clearance air sampling (demonstrated in Figure 5.5) carried out for the third stage of the 4-stage clearance procedure of licensed removal sites applies a rigid pass or fail test and is formalised in ACOP L143. This is dealt with in detail in Chapter 6. The purpose of the test is to assess whether the surfaces inside the enclosure have been sufficiently cleaned to allow the enclosure to be removed with minimal release of airborne fibres. To test this worst case, a dust disturbance simulation is carried out by brushing the surfaces inside the enclosure (eg sweeping with a broom) to raise any settled dust or residual asbestos adhering to the surfaces. To minimise any dilution effects air extraction units are turned off. Dust disturbance is performed at the start of the sampling period. More details are provided in paragraph A5.36.

5.38 The number of clearance samples collected and the period of disturbance is dependent on the size of the enclosure. Details of sample numbers are given in Table A5.5 in Appendix 5. Samplers should be positioned in the immediate vicinity of the previous asbestos locations and other positions throughout the enclosure (see paragraphs A5.36–A5.37). All surfaces adjacent to each sampling location should be 'disturbed' (ie the surrounding floor is swept with a broom and other surfaces swept with the broom, or a brush where there is limited access) for a minimum of 1.5 minutes each (eg if 4 sampling locations, 4 × 1.5 minutes of sweeping = 6 minutes disturbance time). The total disturbance time should be recorded. Very large areas undergoing clearance will require two or more analysts to carry out the clearance air sampling.

5.39 For each sample, a minimum volume of 480 litres should be collected using flow rates up to 16 l/min. A short sampling period (eg 30 minutes) minimises any dilution and settlement effects and makes the test more sensitive to residual amounts of asbestos remaining on the surfaces. If sampling continues for more than 1 hour, the disturbance should be repeated at the start of the next hour of sampling.

Figure 5.5 Analyst setting up a clearance test

5.40 There may be circumstances where a second layer of polythene sheeting (or other material) has been placed on the floor for protection during the asbestos removal. This sacrificial layer of polythene should have been removed by the contractor at the end of their cleaning process. A lower layer of polythene should remain. If there are signs of water leakage or visible material under the polythene, the analyst should instruct the licensed contractor to remove the polythene and clean the surface before stage 3 will be undertaken.

5.41 The PCM count from clearance air sampling, in conjunction with a thorough visual inspection, is regarded as an effective indicator of the completeness of the removal and cleaning of the surfaces. Any fibres counted are assumed to be asbestos.

Leak testing

5.42 The enclosure requires an initial smoke test[5] before any removal work starts, to make sure that the unit is effectively sealed and to prevent fibre spread. Frequent thorough visual inspections of the enclosure during removal work should also be carried out to make sure it is intact and no leaks or damage have occurred. Leak testing will be required when the air extraction unit (ie the NPU) does not vent to the external atmosphere (ie it discharges inside the building). Leak testing will also be required where there are other personnel in the vicinity of the enclosure or asbestos work (eg other trades during refurbishment or other building occupants or users). As asbestos fibres can be emitted from various locations and activities, a number of leak testing monitoring positions should be included (see Figure 5.6):

Figure 5.6 Leak test outside an airlock

- near the enclosure openings, eg next to the 3-stage airlock, where the removal operatives enter and leave the enclosure;
- near the baglock where the double-bagged asbestos waste leaves the enclosure;
- near areas where there had been difficulty sealing the enclosure (eg pipe or cable penetrations or other intrusions, irregular cavities or shapes);
- adjacent to areas which are occupied during the work; and
- near the exhausts of the air extraction system (Note: only required if not venting to external atmosphere).

5.43 Leak testing should involve a combination of short- and long-term sampling. Short-term sampling should be carried out daily, usually just after asbestos removal has started, to check that the controls and containment are effective. It is usually desirable to sample at higher flow rates so the presence of any significant leaks can be quickly determined by analysis of the sample on site. In some situations (eg where the enclosure polythene is the only barrier separating the public or other workers), sampling times may be shortened by taking two or more replicate samples side-by-side which are then analysed and the results pooled to achieve a minimum 480-litre sample. In addition, in occupied buildings longer-term sampling (eg for several hours) should be carried out daily in areas adjacent to the enclosure to determine that there is no deterioration in the standard of control or enclosure integrity over the course of each work period.

5.44 As the fibre monitoring will detect a leak only after it has occurred, it is important that a detailed inspection of the integrity of the enclosure and the control systems is carried out before starting work each day. A visual check on the extent of door flap deflection can be made at the start of each shift (a door flap deflection of ~200–250 mm is expected at the base of the flap with an extraction air volume of 1000m^3/hr) (see Figure 5.7). Also, in sensitive situations, real-time 'live' monitoring can be used to monitor for relative increases in levels of particles or fibres outside the enclosure, to alert the removal contractor and occupants to potential leaks more quickly.

5.45 The cause of any single leak test result above 0.010 f/ml should be investigated immediately. Work should be stopped until the situation has been investigated. The investigation should include:

- inspecting the enclosure for defects;
- checking there is sufficient airlock door flap deflection (see Figure 5.7);
- inspecting the NPUs to make sure that sufficient negative pressure and airflow is still being achieved;

- checking with the licensed contractor to determine if there has been any change in removal methods or work practices or if operatives or waste bags have just come out of the enclosure;
- consideration of other site factors which generate airborne material (eg dry brushing, handling machine-made mineral fibres (MMMF)).

Figure 5.7 Airlock door flap deflection of 200–250 mm in chambers 2 and 3 at the base of the flap (see arrows) indicates that the NPU is extracting 1000m^3/hr and enclosure internal negative pressure is –5 Pascals (see *Asbestos enclosure ventilation research*)[38]

5.46 Any leaks or issues should be identified and rectified promptly by the licensed contractor. If a significant leak has been identified, a further smoke test should be carried out after the repair. When work resumes (irrespective of the original reason for the stoppage), resampling should be conducted at the earliest opportunity. If an elevated concentration of fibres (≥0.010 f/ml) is still found to be present, work should stop and the source should be investigated further (eg asbestos fibres from inside the enclosure, or possibly from elsewhere, or other non-asbestos fibres) (see Appendix 4). Appropriate measures should be taken to rectify the release and/or increase the extent of the work area/exclusion zone.

Background and reassurance sampling

5.47 Background and reassurance sampling are used to determine the prevailing airborne fibre concentrations. Background sampling usually refers to monitoring carried out before an activity (eg asbestos removal or remediation) to establish the baseline fibre level. It may also be performed to assess whether normal occupancy is giving rise to airborne fibres for any reason.

5.48 Reassurance sampling is usually conducted following an asbestos 'incident', when material may have been inadvertently disturbed or discovered after asbestos removal (eg during and/or after the removal of the enclosure after completion of the 4-stage clearance). **Reassurance sampling should be carried out only once the area has been confirmed as visually clean from debris and dust. If debris or dust is present then it should be cleaned up before sampling.**
A visually clean environment is a significant indicator of a dust-free situation. Dust disturbance should not be carried out as part of reassurance sampling unless there are effective controls in place to prevent dispersion of asbestos (eg a new enclosure is built, or the room/building is isolated from other rooms).

Figure 5.8 Background air test

5.49 Background and reassurance sampling (as illustrated in Figure 5.8) are often carried out in areas where many other types of 'regulatory sized' (see paragraph A1.1) but non-asbestos fibres will be present. This situation gives a clear potential for overestimation and misinterpretation of the PCM 'asbestos' results unless further investigation to identify fibre types is performed (see paragraph 5.19 and Appendix 4). Fibre discrimination may require the availability of unmounted filter samples, which can be achieved by cutting the filter in half before mounting half filters for PCM analysis or by duplicate sampling (see paragraph 5.21). Where the specific identification of asbestos fibres is necessary (eg to establish natural background or current levels), sample planning should make sure that analysis by discriminatory techniques will be possible. Suitable filter storage arrangements should be made, to avoid any disturbance of the particles collected on the filter.

5.50 The sampling locations should cover the likely sources of fibre emission and likely areas people will occupy. When background sampling is carried out before licensed asbestos removal starts, the main objective is usually to establish that the background concentrations in air are below the clearance indicator (0.010 f/ml). Otherwise it will not be possible for a CfR to be issued. In this situation a sample volume of at least 480 litres should be collected and sufficient graticule areas examined on the 20–22 mm diameter exposed filter area to achieve a LOQ of 0.010 f/ml. Any background or reassurance value above 0.010 f/ml will need to be investigated. It cannot be assumed that these fibres are asbestos. The source of the fibre emission should be determined and the fibre types identified using methods outlined in Appendix 4. The samples may well be taken shortly before the enclosure is built or soon after it is taken down and may not represent normal occupation conditions.

5.51 When background or reassurance sampling is used to establish the prevailing airborne concentration, more meaningful data can be obtained by sampling for longer periods. Longer sampling periods are more likely to be representative of the average concentration and are more likely to include any incidental releases. Also larger volumes of air can be sampled to improve the LOQ. **A range of flow rates and different filter areas can be used within the limitations of the WHO method** (note: the WHO method specifies that the effective filter area should not be $<20mm^2$). However, experience shows that air filter loadings of around $1m^3$ of air per square centimetre of exposed filter area are usually possible in clean environments, but about half this loading may be the upper limit in some urban environments. Whenever possible, the measurements should be taken to reflect conditions of normal occupancy in the building.

Near-source static sampling

5.52 Static sampling may also be needed to assess/investigate various other situations and sources of release. The list below is illustrative and not exhaustive, to monitor, for example:

- specific areas inside very large enclosures such as power stations;
- exposures where personal samples are likely to become damp or wet;
- releases from known outdoor sources (eg asbestos disposal and waste transfer sites) which require a number of sampling points, both upwind and downwind, to assess the release due to variable wind direction and possible other sources of fibres in the vicinity;
- specific tasks in very dusty operations;

- the ability to wet/suppress dust emissions;
- situations where extended sampling is required (eg several 8-hour sampling periods over a week to give a more representative and sensitive average of occupant exposure);
- the simulation of specific disturbance or release scenarios from incidental or maintenance-type activities for in-place asbestos materials or residuals.

5.53 In general, for near-source static sampling, a sample volume of at least 480 litres should be collected to achieve a LOQ of 0.010 f/ml (unless conditions dictate otherwise; eg if a very time-limited activity or high dust release is expected). In high-dust situations sampling volumes should be reduced. Analysts should exercise discretion in ensuring that the most appropriate sampling methodology is applied. The likely dust and fibre concentrations, sample time, volume and positioning/location should be taken into account in determining the most appropriate sampling parameters. Where it is possible and conditions allow, larger sampling volumes should be collected to improve the analytical sensitivity. In many situations longer periods of sampling will increase both the analytical sensitivity and the representativeness of the sampling.

Far-source/perimeter/ambient sampling

5.54 Far-source and related sampling is often undertaken for reassurance or checking purposes (eg where an activity with the potential to release asbestos fibres is undertaken). These work activities should still be subject to control and dust suppression, as far as possible. These samples may be taken for the following reasons (the list below is not exhaustive):

- around the edge/perimeter of contaminated waste and soil remediation work sites, where the asbestos is exposed on the surface and/or is being actively disturbed or removed;
- around the exclusion zone of asbestos-containing buildings after a fire;
- on the edge of an exclusion zone of demolition work where asbestos materials have not been removed due to the condition of the building or structure (eg it is fire-damaged or derelict/unsafe) or it has not been reasonably practicable to remove them (eg textured decorative coatings, floor tiles, other ACMs well bonded in the fabric of the building such as attached to concrete panels);
- around the exclusion zone of sites where removal of external asbestos is taking place and it has not been possible to enclose the work;
- to assess the external ambient background for fibres.

5.55 As concentrations are likely to be low, an increased volume of air will need to be sampled to increase the LOQ. In many situations increased sampling times may be possible, which will give greater opportunity to include peak release events and give a more representative estimate of the average concentration at the site perimeter. At low concentrations the proportion of asbestos fibres in the PCM count is likely to be much less than compared with near-source situations. Identification of fibres using the procedures in Appendix 4 may be necessary to obtain reliable results for the asbestos concentration.

Analysis, calculation, recording and reporting of results

5.56 The preparation of the filters and the counting of fibres by PCM are detailed in Appendix 1. The equation to calculate the fibre concentration is given in paragraph 5.14 (Equation 1). The values of each term (N, n, D, d and V) used to calculate the fibre concentration (C), along with the value calculated, must be recorded. The presence of background fibre counts on some filters and poor precision of fibre counting will lead to a higher LOD. The current minimum LOQ to be achieved is based on $N = 20$ fibres (40 fibre ends) counted in 200 Walton-Becket graticule areas and a minimum sample volume of 480 litres (see Table 5.2). Due to the variations in the flow rate and the sampling head design when the sample is taken (ie exposed filter area), it may be necessary for the laboratory to count more than 200 graticule areas to achieve a LOQ of 0.010 f/ml.

5.57 If fewer than 20 fibres are counted, the calculated result will have a decreased precision so the calculated results should be reported as less than the LOQ (ie 20 fibres) for measurements of the control limit, STEL, clearance indicator etc. In some circumstances (eg where greater than the minimum requirements have been used), it is useful to also report the calculated result when <20 fibres (ie <40 fibre ends) are counted. Any interpretation will have to take into account the precision of the counts on the actual filters and the associated blanks. The accuracy and precision of fibre counting are discussed further in paragraphs A1.40–A1.45 in Appendix 1. The LOQ should be calculated for each sample based on the measured parameters and a fibre count of 20 fibres by substituting values into Equation 1 (paragraph 5.14) – see Box A1.1 for worked examples.

5.58 The calculated value for the fibre concentration is reported along with a statement as to whether it exceeds the calculated LOQ (eg value exceeds LOQ >0.01 f/ml). All test reports must meet the requirements of ISO 17025, paragraphs A1.47–A1.48 and Table A1.1 in Appendix 1.

Other sampling methods

5.59 Size-selective samplers may be useful in some situations. For example, at potentially dusty sites (eg heavy machinery working on partially dry soil), size-selective sampling can offer important advantages to improve the analytical sensitivity and reduce the bias towards undercounting. It can separate out large particles which are unlikely to penetrate into the deep lung.

5.60 Real-time particle counting instruments are commercially available and can be useful to give additional information on the relative fluctuation of the concentration with time. However, the performance of these instruments may vary over time and in different situations and environments. **These cannot be used as substitutes for membrane filter sampling and analysis** but can be used to supplement the monitoring of emissions and are particularly useful for monitoring the effectiveness of the controls being applied (eg the effectiveness of dust suppression inside a removal enclosure; the early detection of leaks outside the enclosure; and NPU filter performance).

6 SITE CLEARANCE AND CERTIFICATION

Introduction and regulatory requirements

6.1 There is a legal requirement for the premises (or parts of premises) to be thoroughly cleaned after asbestos removal work (CAR Regulation 17). This cleaning is the legal responsibility of the employer of the workers carrying out the work, ie the licensed contractor. Once the cleaning has been completed, the licensed contractor (normally the supervisor) should carry out a thorough visual inspection of the work area in preparation for the 'handover' of the site to the analyst for an independent multi-stage clearance procedure. This visual examination by the supervisor should be sufficiently thorough to make sure that it is completed to a satisfactory visual standard (ie no visible dust or debris). The licensed contractor should complete the handover document (including the signed declaration) to confirm the satisfactory completion of this process. The document should be presented to the analyst. The template for the handover document is given in Appendix A6.4. The analyst should not start the independent clearance until the handover document has been received and is satisfactory.

6.2 The premises or the area(s) where the removal has taken place must be separately independently assessed by the analyst to make sure the locations are thoroughly clean and fit to return to the owner/occupier for reoccupation (or, as appropriate, demolition) (see ACOP L143 paragraph 430). The inspection to establish that the areas are fit for reoccupation must involve conducting a 4-stage examination of the relevant locations and the issue of a clearance certificate (called a 'Certificate for Reoccupation' (CfR)) (see ACOP L143 paragraph 426). This process is separate from and independent of the thorough visual examination required by the licensed contractor.

6.3 This chapter provides an overview of the requirements and procedures for the analyst clearance certification. A summary of the 4-stage clearance procedure is shown in Box 6.1. **The detailed procedures and methodology for site clearance certification are set out in Appendix 5**. Examining the cleanliness of premises and plant is an important aspect of analyst work and currently (2019–2020) more than 30 000 'clearances' are completed annually. It is the analyst's responsibility to make sure these procedures are carried out with utmost diligence and impartiality. The analyst must confirm that none of the planned-to-be-removed asbestos remains in the area and that there is no visible dust or debris on any floors or surfaces. In addition, airborne fibres **must** be below 0.010 f/ml, the asbestos clearance indicator. When these criteria are met, the location is judged to be safe for reoccupation or demolition. **The airborne clearance indicator is not an acceptable permanent environmental level**. It is an indicator of the site cleanliness before the enclosure is removed.

6.4 Complying with the airborne clearance indicator threshold does not mean the area is completely free of airborne asbestos. Due to the very fine nature of asbestos fibres, some fibres may remain in the air for a period of time following any asbestos removal. Airborne fibre levels will reduce to natural background concentrations over time due to dilution, dispersion and settlement. The clearance threshold specifies a maximum acceptable limit for airborne fibre levels following asbestos removal. Further disturbance of any surfaces following dismantling of the enclosure should produce much lower fibre levels. The absence of any visible dust or debris, as confirmed in stages 2 and 4 respectively of the clearance process, will make sure that there are no further sources available to generate airborne asbestos fibres.

6.5 The analyst should be involved in the early scoping and planning of the work to ensure that an adequate risk assessment is carried out and a suitable POW prepared (see paragraphs 1.15–1.16). There also needs to be sufficient scoping and planning to ensure that appropriate time and

resources are allowed for the clearance process and that the complexity of the site and clearance work are established, and that any factors which could disrupt or impede successful clearance are identified and resolved.

6.6 A pre-removal work site visit will also be beneficial to enable potential clearance issues to be identified and resolved. There are numerous factors which can disrupt or impede successful clearance. Some of these are highlighted in paragraphs A5.67–A5.73. These factors will influence the time taken to conduct the thorough visual inspection and could delay completion of the 4-stage clearance. Difficulties in completion of the 4-stage clearance can be avoided, eliminated or reduced by identification and remediation of potential issues in the scoping and planning.

It is the licensed contractor's legal duty to ensure that the work area is thoroughly cleaned after work is completed and the area declared clear of visible asbestos materials before the independent 4-stage clearance procedure is carried out by the analyst. This includes dust and debris on all surfaces, items and equipment. The licensed contractor should complete a handover document to confirm that the area has been inspected and is visually clean. If the handover document is not available or not completed or there is any doubt regarding the cleanliness of the site, the 4-stage clearance should not be started. Receipt of the handover form should be recorded in the Certificate for Reoccupation.

The analyst should NOT clean up any dust or debris as part of the 4-stage clearance. This is work with asbestos and is potentially a licensed activity. Clean-up should only be carried out by the licensed contractor.

Box 6.1 Summary of the 4-stage clearance procedure

Aim: An independent check to ensure that all the asbestos as detailed in the contractor's POW has been removed, the work area/enclosure and its surroundings (ie transit routes, disposal areas) are free of visible asbestos debris and waste and the surfaces of the work area/enclosure have been thoroughly cleaned and decontaminated and that the area is safe for reoccupation or demolition.

The clearance process needs to be properly scoped and planned (see paragraphs 1.15–1.19).

There needs to be sufficient discussion with the licensed contractor to ensure that the necessary time and resources are allocated for it.

The process consists of the following four stages:

- Stage 1: A preliminary check of site condition and job completeness (see Figure 6.1)
- Stage 2: A thorough visual inspection inside the enclosure/work area and airlock and baglock (see Figures 6.2–6.4)
- Stage 3: Air monitoring inside the enclosure with disturbance of surfaces*
- Stage 4: Final visual assessment of the work area after dismantling the enclosure.

*Note: There are some situations where air monitoring with surface disturbance, ie stage 3, is not required (eg external sites: soils, made ground, and AIB soffit removal where a full enclosure has not been used; or there is no internal enclosure).

All 4 stages must be completed and passed. When all 4 stages have been successfully passed the analyst will issue signed copies of the completed CfR to the building occupier or owner and to the licensed contractor.

If there is a failure in any of the 4 stages, a 'failed' certificate should be issued showing the stage failure and reason. The criteria for a stage 2 failure are set out in Box A5.4.

A separate inspection and clearance of the DCU should be carried out for each removal job. A DCU clearance certificate should be issued to the asbestos removal contractor.

Scoping and planning the four-stage clearance

6.7 The analyst should ensure that sufficient time is allowed and taken for the clearance process, with adequate time being assigned to the thorough visual inspection. If a pre-removal work site inspection does not occur, it will be essential for the analyst to be provided with a copy of the contractor's POW before visiting the site for several reasons: to enable their own POW to be prepared, for the 4-stage clearance to be planned in advance (eg site plans prepared) and for the clearance to be properly scoped. The analyst should obtain a copy of the contractor's POW when appointed or at the earliest opportunity.

6.8 The crucial part of the 4-stage clearance is the thorough visual inspection (stage 2) and sufficient inspection time should be allocated for it. The analyst should estimate and record the expected time for the thorough visual inspection. The time estimate should be established through discussion of the site conditions with the licensed contractor. The analyst will also apply their own knowledge and experience of thorough visual inspections (Figure 6.2). Factors which can affect inspection times include: the layout and design of the area, items present, extent and location of surfaces, obstructions, inclusion of ceiling voids, and extent of cables in voids. Factors to consider for the inspection time estimate are set out in Box A5.3 (Appendix 5) and examples of inspection times are given in Table A5.4 (Appendix 5). The time estimate should be inserted into the CfR at stage 1 and the licensed contractor (and the client where practical) advised of the estimated time.

Figure 6.1 Analyst checking airlock as part of stage 1

6.9 The time that the thorough visual inspection actually took should be recorded on the CfR at the end of stage 2. Where there is a greater than 20% difference (ie less than or more than) between the estimated and actual time, a very short explanation should be provided on the CfR. Building occupiers are liable to be concerned and challenging where the inspection time seems unusually short. The analyst should build up a data set of estimated and actual times to inform their estimates in the future. In addition, the analyst should provide photographic evidence in the CfR that the correct procedures have been followed; for example, that the negative pressure unit (NPU) has been capped, and that the areas have been thoroughly cleaned. The CfR form has been redesigned accordingly (see Appendix 6). More information on these matters is given in paragraphs 6.17–6.18.

Figure 6.2 Analyst carrying out a detailed visual inspection

6.10 To make sure there is no uncertainty or confusion over the outcome of the clearance procedures, separate copies of the CfR are provided to the building occupier or owner **and** to the licensed contractor promptly on completion of the process. The licensed contractor should also be issued with a copy of the clearance certificate for the DCU, irrespective of who has employed the analyst. HSE regards the CfR and the clearance certificate for the DCU as the same clearance contractual process. The CfR and DCU clearance certificate can be issued as hard copies or electronically.

6.11 The 4-stage clearance should also be completed without any undue time intervals between stages. Each stage should be conducted in sequence. It is expected that the next stage would immediately follow the previous stage. The full process may be interrupted due to being incomplete at the end of a shift or working day for lengthy thorough visual inspections.

6.12 Entry into enclosures for 4-stage clearance procedures carries a risk of exposure and contamination. Therefore, analysts entering enclosures for this work should be wearing only the appropriate RPE and PPE (see Chapter 9 for details). No domestic clothing should be worn for such enclosure entries.

Site clearance process and certification

6.13 For indoor licensed asbestos removal work ACOP L143 specifies that site clearance certification for reoccupation should be carried out in four successive stages, with the next stage only being started when the previous one has been successfully completed and passed by the analyst (eg stage 3 air sampling should not start until a successful stage 2 thorough visual inspection has been finished). All four stages should be carried out by the same organisation, and normally by the same analyst, as this will help continuity and consistency and will avoid problems with interfaces at each stage of the process.

6.14 The organisation carrying out the 4-stage clearance should have the necessary independence to act completely impartially. It is also a requirement that those employing an organisation to carry out the 4-stage clearance must make sure that the organisation is accredited to meet the relevant criteria in ISO 17020 and ISO 17025. To avoid any conflicts of interest it is strongly recommended that the analyst is employed by the building owner or occupier. Paragraph 1.22 explains the many benefits.

Figure 6.3 Analyst using a screwdriver to check for remnants of asbestos

6.15 When all stages of the 4-stage clearance have been passed as satisfactory a CfR is issued. The clearance assessment and certification process is a vital component in the asbestos removal work. The issue of a CfR by an impartial and competent organisation provides the crucial reassurance and security to the subsequent building users. The multi-stage certification process is designed to allow the inspection and assessment to be performed in a structured, systematic and consistent manner. The contractor should not arrange for the 4-stage clearance procedure to start until satisfied that:

- all the asbestos has been removed as detailed in the POW;
- the area inside the enclosure and airlocks is both clean and dry and has already passed its own thorough visual inspection;
- a handover document has been prepared for the analyst;
- sealant has not been applied.

Figure 6.4 Analyst carrying out the thorough visual inspection

6.16 The analyst and the asbestos removal contractor need to co-operate and support each other during the clearance process. Each also needs to understand their respective roles and responsibilities. It is the responsibility of the contractor to thoroughly and diligently clean up the work area and to carry out a visual inspection to confirm satisfactory cleaning before the analyst starts the formal 4-stage clearance procedure. The contractor should issue a handover document to confirm the site is ready for the analyst's inspection (receipt of the handover form should be recorded in the CfR). The analyst's role is to provide independent verification (Figures 6.3 and 6.4) that the area is clean and suitable for subsequent use. It is **not** the analyst's role to oversee the final cleaning of the area. During the 4-stage clearance, it is the analyst's role to direct the contractor to any need for further minor cleaning (there should be virtually no further cleaning required at this stage) or attention to ensure successful completion of the process. Sufficient time should be allowed for the 4-stage clearance to be performed.

Visual confirmation of site cleanliness and thorough cleaning

Photographic evidence

6.17 The analyst should provide visual confirmation through suitable proportionate and identifiable photographic evidence that all the criteria required for the 4-stage clearance to proceed have been met and that the removal areas are free from asbestos and that the enclosure has been thoroughly cleaned and is visually asbestos dust- and debris-free. This means that larger removals will normally need more photographs than smaller jobs. This evidence will help provide reassurance that the premises are safe for reoccupation or demolition. Photographs should be in colour and can be inserted into the relevant sections of the CfR. Photographs should contain a caption explaining their content and should be sufficiently detailed to enable close examination of the feature highlighted. The required photographs (with time and dates on the photographs) are set out in Tables 6.1 and 6.2.

Table 6.1 Areas and items to be photographed as part of the 4-stage clearance and included in the CfR

	Areas/items to be photographed (photographs should be in colour)
Stage 1	
1	Skip area and waste route are free from obvious asbestos debris and waste bags
2	Transit route is clean and free from obvious asbestos debris and waste bags
3	The DCU is free from obvious asbestos debris and waste bags. Photos should be taken of the clean end, shower and dirty end
4	The areas surrounding the enclosure/work area are free from obvious asbestos debris and waste bags
Stage 2	
1	The airlock and baglock are free of waste bags, materials and unnecessary equipment
2	All ACMs have been completely removed (as far as reasonably practicable) from the underlying surfaces. Sufficient photos should be provided to cover the removal work area(s)
3	The interior surfaces inside the enclosure are free from debris and fine settled dust. Sufficient photos should be provided of the enclosure including high-level surfaces (including scaffolding) and voids
Stage 3	
1	The areas are dry. Sufficient photos should be provided to cover the relevant area(s)
2	The NPUs are sealed
3	The sampling pumps in each of the sampling locations
4	The brush used for disturbance of surfaces
Stage 4	
1	The former enclosure area. Sufficient photos should be provided to cover the relevant area(s)

Table 6.2 Areas and items to be photographed as part of the clearance procedure for the DCU and included in the clearance certificate for DCU

	Areas/items to be photographed
Clean end	
1	Main view of the clean end showing area is clean and free from storage debris and waste sacks
Shower area	
1	Area is free from stored items, obvious debris and waste and is dry
2	Airborne sampling equipment
Dirty end	
1	Area is free from stored items, obvious debris and waste
2	Airborne sampling equipment

6.18 **Photographs should also be taken of the items and areas that are the reason for any failure of the clearance procedures.** These photographs should be entered into the appropriate section of the CfR. The 4-stage clearance procedure and the procedures for inspection of the DCU are set out in detail in Appendix 5.

Video evidence

6.19 It will also be beneficial for a video recording of the 4-stage clearance to be made to provide evidence that the clearance criteria have been met. The video recordings will also be useful for training purposes. Video recordings can be made on mobile cameras, phones or other suitable devices.

6.20 The video should show **key features only** of the clearance process: ie the transit and waste routes, the external area around the enclosure, the internal areas of the enclosure (airlock, baglock, enclosure sections etc), capped NPU, sampling pumps and the area after the enclosure has been dismantled. Video footage can also be used to show locations where additional cleaning was required and visual dust/failures were identified. The video can be submitted on memory stick or other suitable storage format. Video recordings should be presented to both the building client and the licensed contractor irrespective of who engages the analyst. **The video recording is in addition to the CfR.**

Remaining asbestos materials

6.21 The analyst should always highlight, so far as is reasonably practicable, any remaining ACMs in poor condition which are within the clearance area but which were not part of the removal contract or POW. This action will allow analysts to comply with their duty under section 3 of the Health and Safety at Work etc Act to protect the health of people other than their employees. It may also be necessary under CAR Regulation 4(2) ('Duty-to-Manage') where 'every person must co-operate with the dutyholder so far as is necessary to enable the dutyholder to comply with the duties set out under this regulation'. The information should be drawn to the Duty-to-Manage dutyholder's attention and recorded in the CfR. Immediate remedial action by the appropriate person may be necessary, particularly where this material could lead to an air test failure or where it could be easily disturbed in the future.

6.22 The analyst should also remind the occupier/dutyholder on the CfR to update their asbestos location record and management plan regarding the removed ACMs and to actively monitor the area for any deterioration in the future.

Cleaning of areas after incidents or damage

6.23 Clean-up and decontamination of areas are necessary after asbestos disturbance incidents or asbestos (or suspect) debris/dust/material has been discovered. Analysts will be engaged where the clean-up is classed as licensed work. Careful judgement is needed when deciding if the clean-up is licensed work (see paragraph 14, ACOP L143).

6.24 In most 'clean-up' situations involving fragments, debris and dust, exposure is **unlikely** to exceed the control limit or STEL. The material can be simply vacuumed or wiped up, or wetted and picked up and placed into waste bags. Therefore, in many situations cleaning up of material will be non-licensed work. A formal 4-stage clearance procedure will not be necessary where the clean-up work is non-licensed.

Clearance where there is inadequate enclosure integrity

6.25 The analyst should check that the pre-filter was changed before the final clean. The air extraction equipment should be turned off and capped during the air test. However, if, in the opinion of the analyst, switching the air extraction system off would compromise the integrity of the enclosure, and there are people near the enclosure who may be exposed to airborne asbestos fibres as a consequence, the analyst can direct the contractors to leave the system switched on during the air test. Any decision to leave the air extraction system switched on should be noted, with reasons why, on the CfR.

7 SOILS AND MADE GROUND

Introduction and regulatory requirements

7.1 In some circumstances, soil and made ground can contain asbestos. This chapter summarises the requirements for the identification of asbestos in soil and made ground for workers who may be exposed during construction and other planned work activities. The identification of asbestos is part of the risk assessment required under CAR. An assessment and POW are necessary to establish the control measures and safe systems of work to reduce the risk from asbestos to ALARP.

7.2 A survey to identify the presence of asbestos in soils and made ground is required only where there is a reasonable expectation that asbestos could be present and could present a risk to workers (ie only where there is existing knowledge to suggest that asbestos may be present in areas to be developed or redeveloped) (see paragraphs 7.10–7.11). There is no blanket requirement for surveying, soil sampling and analysis for asbestos during land development under CAR. The survey requirement under CAR only applies where there is a work context. CAR does not require asbestos surveys for environmental risk assessments or for public health reasons. Other legislation may require asbestos soil surveys. Quantification of asbestos content is not explicitly required under CAR.

7.3 To prevent unnecessary duplication of effort, the assessment for soil and made ground work under CAR is intended to complement the requirements of other regulatory regimes including the determination of contaminated land under Part 2A of the Environmental Protection Act 1990[39] and the Controlled Waste (England and Wales) Regulations 2012,[40] and for planning/development of land. As noted in the Introduction, this guidance is also intended to be compatible with industry-written guidelines prepared by the Joint Industry Working Group on Asbestos in Soils[10, 11] and the Standing Committee of Analysts.[12]

7.4 Detailed information on the methods to be used for asbestos in soils analysis is presented in Appendices 1, 2 and 7.

7.5 Naturally occurring deposits of asbestos in the UK are quite limited and relatively uncommon. The main source of asbestos in soils and made ground is from the waste and discarded materials arising from the UK's historical importation and use of several million tonnes of asbestos. Most of the imported asbestos was used to manufacture ACM building products.

7.6 Regulation 7(3) of CAR requires that as far as reasonably practicable, ACMs must be removed from buildings before major refurbishment and demolition. After removal, the material should be disposed of as hazardous waste at designated sites according to guidance[41] from the relevant Environmental Authority (Environment Agency, Scottish Environment Protection Agency or Cyfoeth Naturiol Cymru).

7.7 However, asbestos from past use, illegal dumping and poor demolition practices can be encountered on brownfield sites and in urban areas. In most situations asbestos is not likely to be evenly distributed across the site and is likely to occur in area 'hotspots' where it was left or buried. Also, some well-bonded low-hazard asbestos products that are too difficult to remove before demolition may also have found their way into the soil or made ground, as infill material on construction projects.

Differences between asbestos in soils and asbestos in buildings

7.8 The nature of ACMs in soils is often significantly different from those in buildings. The latter are present primarily in the form of identifiable intact defined products in good condition with known asbestos content. Any deterioration is dealt with through removal or repair. In contrast, asbestos products in soils are often not intact but exist in various stages of decomposition or degradation. Some types of ACM will retain their inherent product integrity (ie when most of the asbestos fibres are 'bound' in the matrix of the material). However, over time there will be a tendency for the material matrix to deteriorate and asbestos fibres to become 'unbound' or loosely attached to other particles. These fibres or fibre bundles are invariably retained within the damp soil matrix. It is possible, however, that in certain conditions and circumstances (eg dried-out surface material), soils could, when disturbed (and in the absence of controls), release fibres into the air.

7.9 It is only when the asbestos is on the soil surface (or brought to the surface) that there is contact with the air and the possibility of a risk to people, from inhaling airborne asbestos fibres. Asbestos buried in soil does not spread readily with groundwater or migrate through the soil like many chemical contaminants. Any unbound fibres released into the soil will remain close to the larger pieces of ACMs. ACMs exposed at or near the surface are likely to be subjected to greater levels of weathering and to mechanical, vehicle, human and animal disturbance.

Initial investigation to establish whether ACMs could be present

7.10 As outlined in paragraph 7.2, a site survey for asbestos is only usually required where there is a reasonable expectation that asbestos could be present (eg from past industrial use, ie brownfield sites) or where there is evidence that demolition waste has previously been tipped or brought onto the site. Collection of this information can start by carrying out a desktop study and, if necessary, a visit to the site. Most undeveloped land is unlikely to contain asbestos. The previous use of the site or land as industrial premises or land which contained a building constructed before the year 2000 does not automatically mean that asbestos will be present, nor should that by itself trigger an asbestos risk assessment under CAR. Neither should a few isolated or random pieces of ACMs that may occur from time to time on previously developed or urban land be sufficient to trigger a site survey for asbestos under CAR, even though it may be important for other regulatory regimes.

7.11 The desktop study (illustrated in Figure 7.1) should include a thorough search for the available information (eg previous surveys, local historic maps and records). Local knowledge from near the site can also be useful. Information from the owner or other source on any known existing asbestos contamination (eg from fly-tipping) should also be taken into account. The site history information is used to assess the likelihood that asbestos had been present in significant quantities and may still be present. Potential sources of asbestos include: past asbestos industrial use (eg asbestos product manufacturing, high-temperature industrial processes, heavy manufacturing industries, nuclear and chemical plants, power stations, shipyards), waste storage, transfer and landfill sites, demolition waste, fly-tipping and the remnants of underground/basement boiler rooms from demolished structures. A site visit or examination of recent photographs should be able to identify any visible contamination. Speculative sampling is not required in site visits.

Figure 7.1 Desktop study

7.12 Where a desktop study or other information establishes that it is reasonable to conclude that asbestos could be present and is liable to be disturbed by the work activity, a risk assessment is required under CAR Regulation 6. An initial site appraisal visit and walk round will help to familiarise the risk assessor with the asbestos and other hazards that are present at the site. The initial visit should be used to consider factors which will affect the surveying and work on the site (eg layout, topography, water, buildings, rubble, debris and conditions).

The asbestos risk assessment process for CAR

7.13 The risk assessment should establish the locations(s) and amount of asbestos in the soil or made ground, as far as is reasonably practicable, by surveying and sampling for possible ACMs. The risk assessment should also normally establish the risk from the ACMs based on the asbestos type, product and condition. However, in a soil context, the dispersed nature and weathered/deteriorated/degraded state of ACMs may make it impractical to establish all these factors. The main emphasis should be to carry out a site survey which will identify the location and amount of asbestos and whether it is bound in a matrix (ie bound in its original product matrix **or** fibre bundles bound in a soil matrix) or present as unbound fibres.

7.14 The 'site survey' will usually consist of a 'preliminary' and a 'main' survey. A brief overview of the site survey process is outlined below (and summarised in Figure 7.2) and the process is explained in detail in Appendix 7. From the survey information, the risks arising from planned work activities can be assessed and an adequate control regime can be implemented (see Appendix 7). If the assessment concludes that asbestos materials are not likely to be present, there is no need for further action on asbestos. However, if ACMs/asbestos products are subsequently encountered during the construction activities, then work in the area should stop until a further investigation and assessment are conducted. (Note: The CAR risk assessment process is broadly analogous to an environmental risk assessment, which involves hazard identification and assessment and a risk estimation and evaluation.)

Preliminary site survey

7.15 If the initial investigation concludes that significant asbestos is likely to be present, a preliminary survey is carried out to map the places where asbestos is present. The findings of the initial investigation and preliminary survey are used to plan and scope the main survey (see paragraph 7.16). Limited sampling and analysis will be carried out to confirm the types of ACMs and the types of asbestos present. An initial zoning of the site (eg not detected, low, medium and high) can take place to help inform the planning for the main asbestos survey. In some instances (eg at small or simple sites), the results of the preliminary survey may be sufficient for conclusions to be reached on the extent of spread, type and quantity of asbestos materials, and what actions are needed to control the risks from subsequent site work.

Main site survey

7.16 This is the detailed site survey for asbestos. The survey will usually consist of a surface and/or depth survey to more accurately locate, map and zone where asbestos is present and the amount. For the purposes of the assessment requirements of CAR Regulation 6, an in-situ assessment of the amount of asbestos material present is usually sufficient. However, if the asbestos is widely present as fine unbound fibres, a more rigorous strategy for sampling and quantitative analysis is required. This approach is also necessary for planning and Part 2A contaminated land assessment purposes.[42] The overall precision of the quantitative measurements will depend heavily on the survey strategy and the representativeness of the samples collected (ie the unit size of the area or volume sampled and the sub-sampling method used). These matters are covered in more detail in Appendix 7.

Laboratory identification of asbestos

7.17 Confirmation that asbestos is present in samples of suspected ACMs and soil containing fine fragments of ACMs and unbound asbestos fibres is obtained using the standard analytical method for identifying asbestos using a combination of stereo-microscopy and polarised light microscopy (PLM) analysis (see Appendix 2). Soil samples with no visible fragments of ACMs or asbestos fibres should be searched carefully by stereo-microscopy and, if none are found, several small sub-samples should be taken and mounted on microscope slides and searched using PLM for fine fibres using higher magnifications (> 100x).

7.18 As nearly all manufactured ACMs had >1% w/w asbestos added, it is usually relatively straightforward to determine from the identification whether there are visible pieces of ACMs present in the sample. For more difficult analyses, where only fine asbestos fibres are present, Appendix 2 provides three outcomes: not detected, trace and detected. If the method in Appendix 2 is followed and the recommended time for the analysis is taken, the analysis can normally identify that asbestos is present in samples down to a concentration of ~0.001%. For soil samples which contain finely dispersed asbestos and ACM fragments, results expressed in terms of the number of asbestos fibres per gram, rather than just mass per cent, can be more informative of the potential of the soil to release fibres to air.

Laboratory quantification of asbestos content

7.19 A full quantitative laboratory analysis of the amount of asbestos present in a soil sample or bulk material is not required for the CAR risk assessment (see paragraph A7.43) but, if the quantitative results are available, they can be used to assess the risk. Quantification of whether the mass percent of asbestos is > 0.1% is used by the Environment Agency for the classification of hazardous waste and for environmental permitting and housing developments on brownfield sites.[43] Mass percentage is usually determined as a weight for weight (w/w) percentage of the matrix for both visible bound ACMs and unbound asbestos fibres in soil. Various methods for the quantitative assessment of the mass percentage of asbestos in ACMs and for soils and bulk materials have been developed.[44, 45]

Risk estimation and evaluation

Minimising the risk to workers

7.20 The risk to workers and the public should be reduced to ALARP to meet the requirements of CAR. This can initially be achieved by mapping and zoning areas where the visible ACMs are present and avoiding or minimising any disturbance in these areas. If disturbance of the areas where asbestos is present is unavoidable, the forms, amounts and types of asbestos present will inform the risk assessment so that appropriate controls can be identified. Air monitoring, as detailed in Appendix 1, can be carried out to assess whether the controls and respiratory protection are adequate.

Interpretation of results for assessing the risk to workers

7.21 The extent of airborne fibres released from soils and made ground will depend on several factors including the:

- nature of the asbestos material (eg bound or unbound or a combination);
- percentage of asbestos in soil (w/w);
- type of soil and the nature of any disturbance (eg mechanical excavation);
- condition of the soil (eg moisture content).

Air monitoring has shown[46] that airborne fibre concentrations rarely exceed the LOQ and are unlikely to exceed the control limit unless the work is disturbing relatively high percentages (>1%) of unbound asbestos in dry soil.[47] Where there is mostly bound asbestos in soils, below a mass concentration of 0.1% w/w, airborne fibre concentrations are unlikely to exceed the LOQ for personal sampling. When the soil is damp or wet, airborne emissions of asbestos will be suppressed and wind dilution and dispersion of any emissions will also reduce worker and bystander exposures.

7.22 There is significant evidence indicating that most worker fibre exposure from soil remediation and removal work will be below the LOQ (ie <0.010 f/ml) when carried out under controlled conditions (ie wetting) and using mechanical equipment. This sampling information will be useful for many risk assessments and confirms the need for continued control. This does not mean that soil remediation activities will *always* give rise to low exposure. More energetic processes (eg crushing, power screening and grading of demolition waste and made land/soil) may give rise to elevated fibre levels, especially if dry. There may also be situations where direct handling of dry ACMs may occur (eg conveyor belt screening, picking out debris or picking up material) which may give rise to measurable personal exposures when handling significant quantities. Where significant fine unbound asbestos fibres are present, action should be taken to control any work-related release to air by keeping the soil damp.

7.23 As information on airborne fibre exposure concentrations is built up, the site data can be used to further inform and refine approaches that can be used to rank areas of the site to identify where further management and controls are needed to protect workers. An algorithm approach (similar to that used for surveying and assessing in-place asbestos in buildings; see HSG264) has been developed by JIWG/CL:AIRE[10] for use on sites. Guidance is also available from CIRIA.[48]

7.24 For CAR, the overall purpose of the survey and site assessment is to protect workers from the asbestos hazard. The site survey data should be used to identify asbestos hotspots and the surrounding areas which have lower amounts of asbestos (ie spread from the hotspot). This can be in the form of approximate contours of the amount of asbestos found and/or colour coded as a red, amber or green zone. These zoned areas are used to communicate the appropriate management and control procedures that should be used by workers on the site to reduce their exposure to airborne asbestos to ALARP.

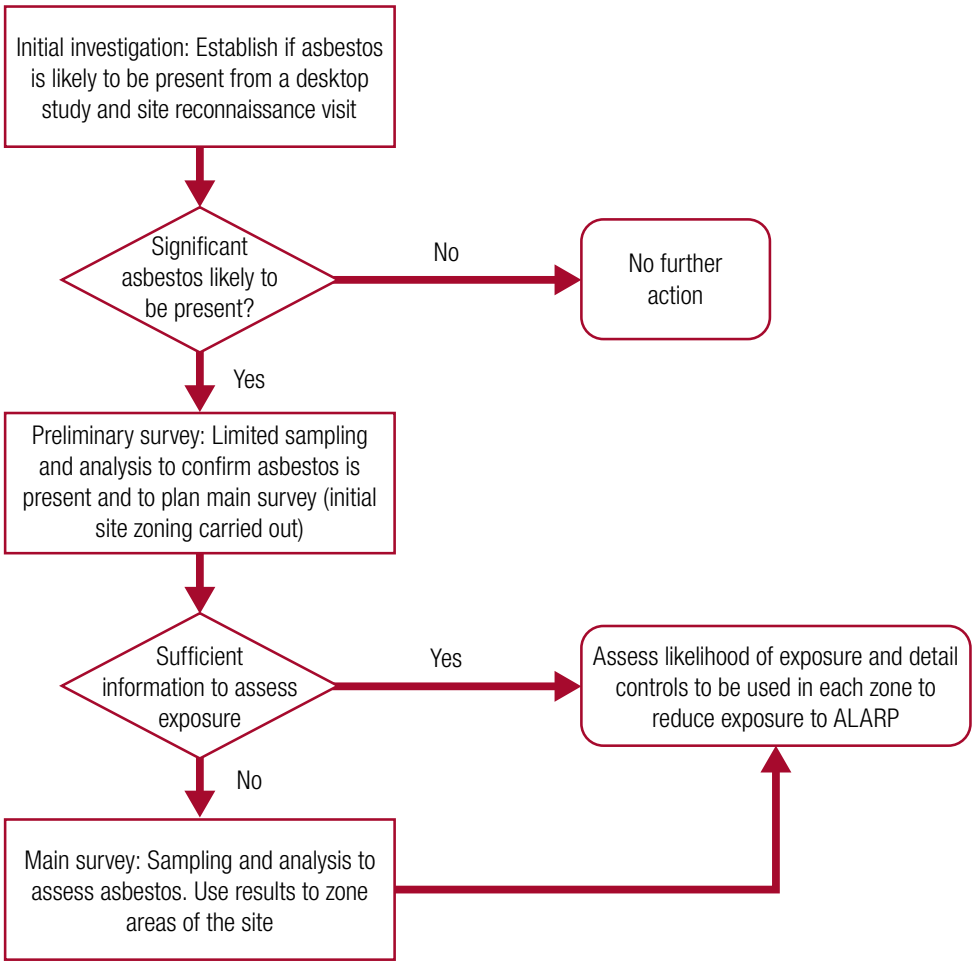

Figure 7.2 Overview of the assessment for asbestos

Part 3: Controlling the risks to analysts

8 PERSONAL PROTECTIVE EQUIPMENT

Introduction and regulatory requirements

8.1 The use of PPE (including RPE) is an essential component in the measures taken by analysts to control their exposure to asbestos and to reduce the spread of asbestos. This chapter explains PPE, in particular RPE and coveralls, and their provision, use and maintenance by analysts.

8.2 Analysts carry out a range of activities which will cause disturbance of asbestos and potential exposure and spread. Therefore, analyst organisations as employers must comply with the CAR (Regulation 11) requirements to reduce exposure for employees to ALARP including by the use of RPE. Analysts will also generally apply a range of control measures during asbestos disturbance situations to make sure that the potential for exposure and spread is minimised (eg fibre suppression during bulk sampling collection). The requirement for an adequate risk assessment, written POW and site-specific control measures is described in paragraphs 1.15–1.19.

8.3 It is generally unlikely that the analyst will be exposed to airborne asbestos fibres at concentrations above the control limit or the STEL. The exception would be where they enter a 'live' asbestos enclosure, ie where removal is taking place. However, entry into live enclosures should be avoided. Analysts supporting licensed contractors by assisting with the management of removal works, inspecting enclosures, witnessing smoke tests and conducting personal monitoring etc should be able to perform most of these activities from outside the enclosure.

8.4 Monitoring of workers to provide an accurate record of their activities should be possible from outside enclosures by using the viewing panels and CCTV. However, where entry into a live enclosure cannot be avoided, then time spent should be the minimum necessary to conduct the checks and inspections. **Analysts should not enter live enclosures at the request of the licensed contractor or building client to check on the standard of removal or cleaning. Such inspections by the analyst should only be conducted as part of the 4-stage clearance procedures**.

8.5 In addition, entry into a poorly cleaned enclosure as part of the 4-stage clearance can (and should) be avoided by examination of the enclosure from the outside (again using viewing panels and/or CCTV). If the area appears dirty or suspect material can clearly be seen or the handover form is not satisfactory, the analyst should not enter the enclosure until these matters have been dealt with.

8.6 There are situations where the analyst will potentially generate raised airborne fibre concentrations (eg during disturbance brushing for the CfR or when they actively disturb asbestos during the collection of samples of asbestos materials). RPE (and PPE) should be worn in these situations and where there is any work that could disturb asbestos.

Respiratory protective equipment

8.7 RPE is an important control measure for analysts but it has to be suitable for the wearer and worn correctly. Selection of appropriate RPE will include a fit test (tight-fitting equipment only) to make sure it effectively seals against the wearer's face. Ill-fitting RPE will create small gaps, allowing inward leakage of airborne contaminants, causing exposure and reduced protection. Exposure may be unnoticed by the unsuspecting wearer.

8.8 The RPE used by the analyst should be formally selected in a risk assessment, based on the requirements of the individual and the work.

8.9 Individuals should be involved and consulted in the mask selection process (see Figure 8.1). The results from previous air monitoring can be used to assist the assessment.

Figure 8.1 Types of filtering half-mask respirators

8.10 More details on selecting suitable RPE can be found in the HSE publication HSG53 *Respiratory protective equipment at work – a practical guide.*[49]

Table 8.1 Respirator selection chart for protection against asbestos in air

Assigned Protection Factor (APF)	Filtering face-piece or valved filtering half-mask BS EN 149 or BS EN 405	Filtering half-masks without inhalation valves BS EN 1827	Half-mask BS EN 140 and filter BS EN 143	Full-face mask BS EN 136 and filter BS EN 143	Powered hoods and filter BS EN 12941	Power-assisted masks and filter BS EN 12942
40				Mask with P3 filter	TH3 Hoods, blouses with P3 filter	TM3 Full-face mask with P3 filter
20	FFP3	FMP3	Mask with P3 filter		TH2 All types of face-pieces with P3 filter	TM2 All types of face-pieces with P3 filter

8.11 In practice analysts are likely to wear only a limited range of RPE. This equipment is shown in Figure 8.1 and summarised in Table 8.1. A half-mask with P3 filter or a disposable FFP3 mask is likely to be used for most analyst activities including inspections, surveying, sampling and clearance procedures. Where RPE has to be worn continuously for periods over an hour, powered equipment will be necessary (alternatively analysts should take a break on an hourly basis).

8.12 A full-facepiece powered respirator should be worn when entry into a live enclosure is necessary. However, in situations where a face-fit cannot be obtained (eg due to facial hair) individuals may need to use powered hoods or blouses (see Table 8.1). It is essential that the RPE provided is suitable for the individual wearer.

Tight-fitting facepieces, fit testing and fit checking

8.13 The performance of any tight-fitting facepiece depends on achieving a good contact between the wearer's skin and the face seal of the facepiece. To make sure that the selected facepiece can comfortably and adequately seal to the wearer's face, a fit test should be carried out as part of the initial RPE selection process.

8.14 Further details on RPE fit testing can be found in the leaflet INDG479: *Fit testing of respiratory protective equipment facepieces*.[50] Fit test providers must be competent. INDG479 describes one way in which fit testing competence can be demonstrated – through the Fit2Fit RPE Fit Test Providers Accreditation Scheme.

8.15 RPE also has to be fitted on the wearer properly every time the equipment is used. Therefore, a pre-use wearer seal check (fit check) should be carried out every time the mask is worn. This includes after breaks and even short periods of non-use. The fit check will make sure that a good face seal has been achieved and that the mask should provide protection.

Repeat fit tests

8.16 Fit tests are very specific procedures designed around the individual and RPE at a particular point in time. Repeat tests will be necessary when the original circumstances or conditions are no longer valid or a sufficient time period has passed. Further details can be found in INDG479.

Pre-use checks

8.17 The RPE should be checked to make sure it is clean and in good working order before each use. The wearer should be trained to do this. The pre-use checks are summarised in Table 8.2.

Table 8.2 Summary of pre-use checks to be carried out when RPE is worn

Disposable and half-masks	**Full-piece powered respirators** **As for disposable and half-masks and also the following**
Facepiece is clean and in good physical condition with no damage or distortion to the face seal	Visor, seals, gaskets and 'O' rings are present and in good condition and components can connect securely. Any threaded connectors and seals are in good condition
Head harness and anchorage points are undamaged and can hold the facepiece on the face correctly, securely and comfortably	Battery charge/condition
All valves (especially exhale valves) are present, in good condition and correctly seated	Airflow rate for power-assisted and powered respirators has been checked and meets manufacturer's specification
Filters are correct, in good condition, in date and securely fitted	The RPE is complete and correctly assembled
Any additional tests in accordance with the manufacturer's instructions	

Correct fitting and wearing

8.18 RPE should be fitted properly (see Figure 8.2) and worn correctly to obtain the designed performance. Information on correct donning and fit-checking (ie the pre-use wearer seal check) procedures should be included in the manufacturer's instructions. Analysts should be trained in correct fitting of RPE and fit-checking.

8.19 RPE should always be fitted correctly and securely on the head before donning other PPE or headgear. Applying RPE over caps, hoods, goggle straps etc can prevent the RPE fitting correctly or result in slippage during wear.

8.20 Stubble, beards, sideburns or wearing glasses will seriously adversely affect the face seal of tight-fitting facepieces, which rely on a close contact between face and mask. Analysts wearing tight-fitting RPE should be clean-shaven in the area of the face seal at the beginning of their work shift. Analysts with long hair should make sure that hair does not get caught between the face seal and skin, particularly when full-facepiece masks are worn.

Figure 8.2 Pre-use wearer seal check (fit check) of half-face mask

Figure 8.3 Non-disposable RPE needs to be examined and tested

Maintenance

8.21 All RPE (except the disposable type) should be thoroughly examined and tested (Figure 8.3) by trained personnel before it is issued to any wearer for the first time and at least once a month to make sure that it is working properly to its design specification. A record of inspection, examination, maintenance and defects remedied must be kept for five years. Only proprietary spare parts should be used. Do not modify any form of RPE without the knowledge and consent of the manufacturer.

8.22 The manufacturer of RPE will provide instructions on cleaning, maintenance and additional checks and tests and these should be followed. After each use, non-disposable RPE should be decontaminated, cleaned, disinfected and placed in suitable storage specifically provided for that purpose.

Training for analysts

8.23 Analysts should be given adequate instruction, information and training on the following:

- reasons why a type of RPE has been selected, and what it can and cannot do and the appropriate types of filter to use;
- how to fit (don) and use the RPE correctly;
- why a tight-fitting facepiece should be worn correctly, the importance of fit testing for the initial selection of suitable equipment and how to fit-check the face seal each time it is donned;
- the danger if RPE is taken off and/or put down in a contaminated area, and what to do about RPE in a medical emergency;
- recognising a reduction in airflow (where appropriate) and what to do if it happens;
- checking the RPE before each use (pre-use checking);
- the need to ensure thorough examination and maintenance of the RPE;
- cleaning and decontaminating RPE when leaving the work area, and storing RPE and filter when not in use (if it is to be reused).

8.24 Analysts should also receive regular refresher training/instruction (at least once a year or as indicated by TNA; see paragraph 3.3) on the use of RPE. Employers should not assume that because their workers have worn RPE before they will always use it properly.

Other personal protective equipment

8.25 PPE, in particular coveralls and footwear, are a crucial part of the control regime to prevent the spread of asbestos and secondary exposure for the analyst. Coveralls are normally sacrificial disposable items. Similarly, cleanable footwear is worn to prevent spread of asbestos outside of the work zone.

Coveralls

8.26 Coveralls should be worn by analysts whenever a risk assessment indicates there is a possibility of contamination with asbestos fibres. In practice, this is likely to mean during all asbestos sampling and enclosure entry. Disposable coveralls are most common and eliminate the need for any laundering. They can easily be double-bagged and disposed of as asbestos waste. Coverall material should be sufficiently strong and robust to withstand abrasive physical contact and damage from crawling, kneeling and climbing in the demanding environment of a removal site. The coveralls should also limit the penetration of fibres through intact material. BS EN ISO 13982-1[51] Type 5 (Category 3 PPE) disposable coveralls should be used.

Use of domestic clothing

8.27 During most bulk sampling situations, a single protective coverall worn over normal clothing (and suitable RPE) should be sufficient. However, in situations involving known or anticipated heavily contaminated areas or where close contact with asbestos will take place including 4-stage clearances, **normal domestic/workwear* clothing should NOT be worn**. In these circumstances, the potential for contamination is greater and, if coverall protection is breached (eg through tearing), underclothes could become contaminated. Therefore, only protective and disposable clothing should be worn (see Figure 8.4). In these situations, two disposable coveralls (referred to as an 'inner' and an 'outer' coverall) (and appropriate disposable undergarments) should be worn.

* (i) Domestic/workwear clothing includes 'civilian', office wear, industrial workwear such as boiler suits etc.
(ii) Additional clothing may be required in some circumstances (eg cold weather). Disposable vests, pants and socks are available and are recommended. If 'non-disposable' items are worn, these should be disposed of on a daily basis.

PPE and RPE for asbestos activities

8.28 The use of two sets of disposable clothing will allow analysts to undergo full decontamination procedures if necessary. (Full details of analyst decontamination procedures for 4-stage clearance work are set out in Chapter 9.) In other sampling situations where two sets of disposable coveralls are worn, on completion of the work, the top (ie 'outer') coverall can be cleaned down as necessary (eg by wet wiping), removed, double-bagged and disposed of as asbestos waste as appropriate. The analyst can subsequently move around/carry out other tasks wearing the 'inner' coverall. If a contamination breach of the 'inner' coverall has occurred, then company emergency decontamination procedures should be followed.

8.29 Normal workwear shoes should be sufficient for most sampling situations. However, in circumstances where the potential for contamination is greater (eg 4-stage clearances, demolition and refurbishment surveys, and working in unpredictable spaces such as undercrofts or surveying contaminated soils), then laceless footwear (eg wellingtons or rigger boots) should be worn. These can easily be cleaned if there is any contamination. Site rules on safety footwear (eg protective toecaps) may also need to be taken into account.

8.30 Similarly where the potential for contamination is great or when sampling suspected ACMs, disposable gloves can also be worn, to prevent contamination of hands and nails.

Figure 8.4 Analyst wearing appropriate PPE/RPE

Decontamination unit clearance procedures

8.31 Analysts should wear RPE and PPE while carrying out clearance procedures in the shower and dirty end of the DCU (ie visual inspection and air sampling). A single coverall over domestic clothes can be worn along with suitable RPE.

Entry into 'live' enclosures (see definition in paragraph 1.6 and associated footnote)

8.32 Where entry into a 'live' enclosure is necessary (this should not be a routine or common occurrence), analysts should be dressed in appropriate clothing for the situation where elevated airborne asbestos concentrations are likely and full decontamination procedures will be necessary. The RPE and PPE will consist of full-facepiece powered respirators with P3 filters, disposable underclothes, disposable coveralls (including transiting coveralls if required), and laceless, cleanable footwear. Gloves may also be worn.

Summary of clothing, PPE and RPE to be worn

8.33 A summary of the clothing, PPE and RPE that should be worn during various analyst activities is listed in Table 8.3. The table also summarises the appropriate decontamination procedures for the activities.

Table 8.3 Summary of the minimum standard of clothing, PPE and RPE to be worn and decontamination procedures for analysts for various activities

		Summary of PPE to be worn			Decontamination required	
	Domestic clothes possible?	**Coverall**	**RPE[1]**	**Cleanable footwear**	**Preliminary**	**Full**
Survey/other bulk sampling: normal[2]	Yes	Single	Half-mask or disposable APF=20	Yes	Yes	No
Survey/other bulk sampling: known/ anticipated heavy contamination/high risk[2]	No	Two	Half-mask or disposable APF=20	Yes	Yes	No
4-stage clearance: stage 1 and any pre-enclosure entry preparation[3]	Yes	Optional	No	Optional	No	No
4-stage clearance: stages 2 and 3 (inside enclosure)	No	Two[4]	Half-mask or disposable APF=20	Yes	Yes	If necessary[5]
4-stage clearance: stage 4 visual inspection (after enclosure dismantling)	Yes	Optional	Optional	Yes	If necessary	No
DCU clearance[6]	Yes	Single	Half-mask or disposable APF=20	Yes	Yes	No
Live enclosures[7]	No	Two	Full-facepiece powered APF=40	Yes	Yes	Yes

Notes
1 Where RPE has to be worn continuously for long periods, powered equipment or breaks will be necessary (see paragraph 8.11).
2 See paragraph 8.27.
3 See paragraph 9.7.
4 See paragraphs 9.4–9.5.
5 See paragraphs 9.9–9.10.
6 See paragraph 8.31.
7 See paragraph 8.32.

9 DECONTAMINATION PROCEDURES

Introduction

9.1 All analysts who enter asbestos enclosures or designated work areas may become contaminated and need to decontaminate themselves. The purpose of decontamination is to make sure that PPE and RPE, as well as the individual, are cleaned to prevent further spread of asbestos. Decontamination should also be conducted safely to avoid secondary exposure for the analyst.

Four-stage clearance

9.2 The required procedures are set out below for analysts entering and exiting asbestos enclosures or work areas to perform 4-stage clearances. The analyst will be wearing at least two coveralls: an 'inner' and an 'outer' (see paragraph 8.27). There are two levels of decontamination possible for analysts based on the extent of the contamination that has occurred during the clearance procedures:

- 'preliminary' decontamination, where little contamination has occurred and which involves cleaning in the airlock system (as illustrated in Figure 9.1);
- 'full' decontamination, where significant contamination has occurred. This procedure includes the 'preliminary decontamination' and further decontamination in the DCU.

Preliminary decontamination

9.3 The preliminary decontamination involves:

- vacuuming down the 'outer' coverall, cleaning footwear and RPE (using the facilities at the edge of the enclosure or in the inner stage of the airlock);
- removing the 'outer' coverall in the middle stage (which can be retained for subsequent reuse if re-entry is planned or disposed of if it is damaged);
- exiting the airlock wearing the 'inner' coverall and then removing the RPE.

Details of the preliminary decontamination procedures are given in Box 9.1.

Figure 9.1 Analyst carrying out preliminary decontamination using a Class H vacuum cleaner

9.4 The actual decontamination procedure undertaken will be determined each time the analyst exits an enclosure. Because there is the potential for the analyst to require 'full decontamination' every time the enclosure is exited, the arrangements should always be in place to allow full decontamination **if it becomes necessary**. The physical nature of the clearance inspection, which often involves crawling, kneeling, stretching and climbing, can lead to coverall damage (eg ripping or tearing), exposing and contaminating underclothes. Therefore, **analysts should NOT wear any 'domestic' clothing inside the enclosure** and should be prepared to go through the DCU if the circumstances merit or require it.

Figure 9.2 Analyst entering enclosure

9.5 In practice this means that, before entering the enclosure (ie as part of stages 2 or 3), the analyst should remove all domestic clothing and change into at least two coveralls (plus any disposable underclothes as necessary) and footwear (see Figure 9.2). An extra (ie third) coverall can be worn if desired and swimsuits can be worn (or alternative washable or disposable items) also if desired. The analyst can change in the 'clean end' of the DCU and emerge directly from there (ie there is no need to go through the shower or 'dirty end'). (Note: the exception would be where there is a direct connection between the DCU and the enclosure.)

9.6 Another possible option is for the analyst to arrive at the airlock already wearing the required PPE and no domestic clothing. There may be other options available to the analyst in terms of preparing to enter the enclosure. Irrespective of the preparation arrangements, the analyst's domestic clothing plus towel etc should be placed at the clean end of the DCU for use on completion of the clearance procedures. RPE should be put on before entering the enclosure for stages 2 and 3.

9.7 It will be possible for the analyst to carry out pre-enclosure entry work (eg stage 1, preparation for stages 2 and 3 etc) without wearing PPE or RPE. PPE and RPE will be required for entry into the enclosure for stages 2 and 3. PPE and RPE are also required for DCU clearance (see Table 8.3).

Figure 9.3 Analyst exiting an enclosure

9.8 Every time the analyst emerges from the enclosure during the 4-stage clearance, preliminary decontamination should be carried out (see Figure 9.3). Where full decontamination is deemed **not** to be necessary (see paragraphs 9.9–9.10), RPE can be removed on exiting the airlock and the analyst can move around the site wearing the 'inner' coverall. However, RPE and a second coverall should be put on again to re-enter the enclosure. This can include the previously worn 'outer' coverall which was left in the airlock (providing it was not ripped etc. when last removed).

9.9 On exiting the enclosure for any reason (eg clearance failure, after setting up the air sampling equipment or on completion of stage 3), the analyst should make a professional judgement as to whether full decontamination is going to be necessary. The preliminary decontamination should be performed **in all cases** (as noted above and in Box 9.1).

9.10 If full decontamination is considered to be necessary, the analyst should proceed to the dirty end of the DCU and go through the full decontamination. If full decontamination is not considered to be necessary (which should be the case in most situations), the analyst should remove the RPE outside the airlock (place it in a waste bag or keep it for further use as appropriate).

9.11 There are various options regarding the time for the analyst to change back into normal clothing, eg after stage 2, stage 3, stage 4 or DCU clearance. Full PPE (ie two pairs of coveralls) and RPE will be necessary for re-entry for stages 2 and 3. In addition, RPE and PPE (over domestic clothing) should be worn for the DCU clearance. PPE can also be worn (again over domestic clothing) for the stage 4 final inspection.

9.12 It is expected that the 'inner' coverall and any undergarments (eg vest, underwear and socks) will be disposed of on a frequent basis (ie daily). The 'inner' coverall may also have to be replaced more often where it has become damaged or contaminated.

9.13 Analysts should be instructed and trained on the conditions which will require full decontamination. The conditions should be set out in company policy and should include where:

- significant or gross contamination has occurred;
- 'outer' coveralls have been ripped or damaged;
- 'inner' coveralls/underclothes may have become contaminated.

Some of these decisions are subjective so it may be easier to specify what 'minor' contamination is and then advise full decontamination where contamination is not minor. The ultimate decision should be based on the professional judgement of the analyst. If there is any doubt full decontamination should be performed.

9.14 Analyst entry and exit enclosure and decontamination procedures will rely on the assistance of the licensed contractor who provides the facilities for the processes. There should be immediate discussion about decontamination arrangements with the contractor before work starts.

9.15 Analysts must be properly trained to decontaminate themselves and will need to complete practical training as outlined in HSG247 *Asbestos: The licensed contractors' guide*. This sets out the procedures for full decontamination.

9.16 Most of the items for preliminary decontamination will be supplied or available through the licensed contractor. The enclosure is still active and should have a Class H vacuum cleaner in place along with buckets of water, brushes and sponges or wipes. The analyst should check that these are available before entry into the enclosure to perform stage 2 of the 4-stage clearance (see paragraph A5.2). The analyst will also need to have available (or access to) other items including:

- asbestos waste bags: for contaminated PPE, equipment and cleaning materials;
- duct tape: to seal bags;
- wet wipes: to clean tools and equipment.

9.17 In other situations where sampling or other activities occur where RPE and PPE is worn (eg where there is no enclosure), decontamination of equipment and RPE and PPE should also be undertaken. The decontamination process will be essentially similar to the 'preliminary' procedures and therefore the same items outlined above will be required.

Box 9.1 Preliminary decontamination procedures

The enclosure is still active and will have a Class H vacuum cleaner along with two buckets of water with brush and sponge, or wipes. The vacuum should be located at the edge of the enclosure and the other items in the inner stage of the 3-stage airlock system.

The vacuum should be used to clean RPE and PPE including footwear. The RPE should then be wiped or dampened down using a wet sponge or wipe. Footwear should be cleaned in the bucket using the brush.

Sampling equipment and other entry items should be cleaned/wiped down.

The outer coverall should be removed in the middle stage of the airlock and retained for later entry or placed in a waste bag if damaged or enclosure entry is complete.

The analyst should exit the airlock system and remove the RPE outside the airlock (place it in a waste bag or keep for further use as appropriate) and proceed to carry out further duties still wearing the inner coverall.

The process is shown pictorially in Figure 9.4.

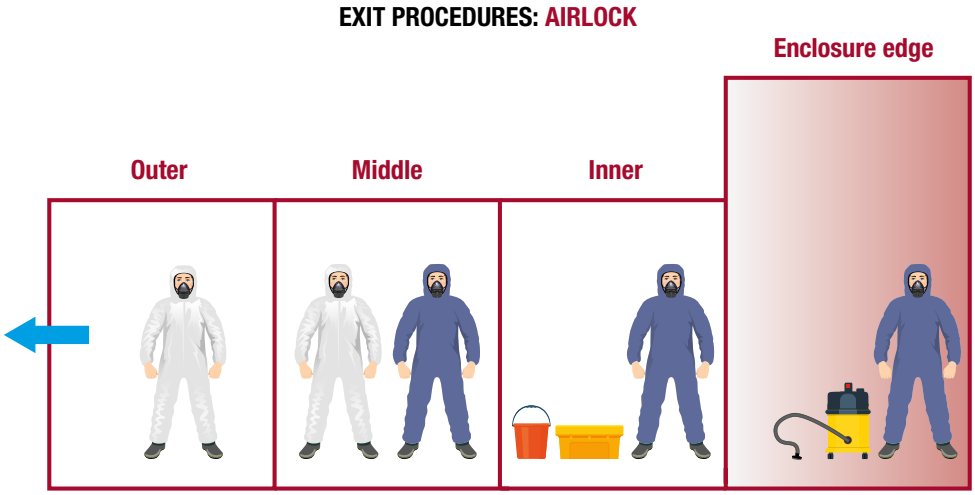

Enclosure edge: Vacuum coverall, footwear
Airlock inner stage: Wipe mask, brush boots, clean equipment
Middle: Remove outer coverall (retain for re-entry or discard)
Outer: No action
Outside airlock: Remove RPE

Figure 9.4 Preliminary decontamination procedures (on exiting the enclosure (from right to left))

Full decontamination

9.18 Procedures for full contamination are set out in Box 9.2. This requires the use of the licence holder's DCU, which should have been agreed in advance by the analyst and removal contractor.

9.19 Equipment taken into the enclosure will normally be clean. When leaving the enclosure, equipment or sample containers should be treated as contaminated unless the analyst has decontaminated them. The outside of smooth surfaces (eg plastic bags, sample tins, plastic containers, cameras, phones) can be wiped with wet wipes in the middle airlock as this will be sufficient to remove any attached fibres. Decontaminated items can be placed in an appropriately labelled bag or container and taken out via the airlock. Equipment (eg sampling pumps, rotameters, mirrors, tripods, torches) can also normally be wet wiped and placed in a clean polythene bag and taken out via the airlock. Further decontamination may take place if necessary on return to the laboratory using appropriate facilities.

Decontamination following bulk sampling

9.20 For bulk sampling (eg building or soil/made ground surveys), gloves and possibly coveralls and footwear may become contaminated. Gloves would generally be cleaned or discarded (as asbestos waste) between samples to avoid cross-contamination. On completion of the sampling, coveralls should be cleaned (wiped) if necessary and discarded as asbestos waste. Footwear (particularly the soles) is likely to require decontamination by wiping or washing in the bucket of water. Reusable RPE should be cleaned and retained for subsequent reuse. Disposable RPE and wipes should be discarded as asbestos waste.

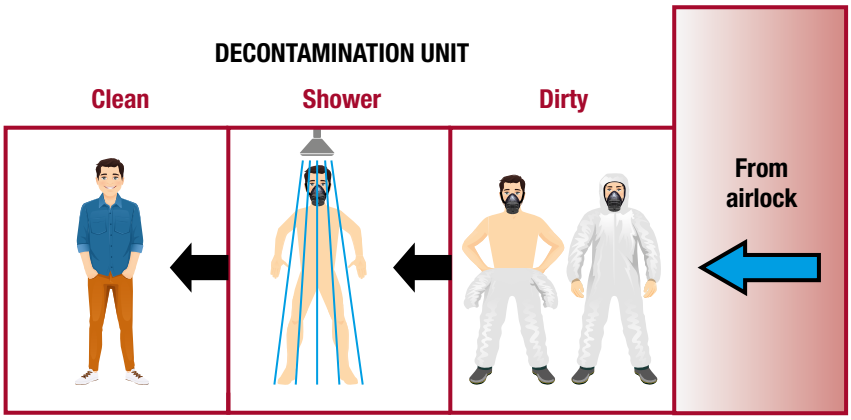

Dirty end: Remove and discard all items except RPE (and swimwear); carry footwear into shower

Shower: Wet mask, remove and clean; remove or cap filter; wash swimwear; clean footwear; carry items into clean end

Clean end: Dry and dress

Figure 9.5 Full decontamination procedures in the DCU (from right to left)

Box 9.2 Full decontamination procedures (based on transiting arrangement)

The analyst should make the decision that full decontamination is necessary before leaving the enclosure to enter the airlock. The procedure is as follows:

Perform preliminary decontamination at the enclosure edge and inner stage of airlock as normal.

Remove and discard the 'outer' coverall as waste in the middle stage of the airlock.

Put on overshoes/transit footwear left in outer stage of the airlock.

Emerge from the airlock, still wearing RPE, footwear and inner coverall, and proceed to the dirty end of the DCU.

In the DCU dirty end, remove all disposable clothing (underclothes such as swimsuits can be retained) and footwear. Disposable items are discarded as asbestos waste. RPE should still be worn.

Enter the shower section carrying footwear and wearing RPE. Operate the shower. Wet the RPE and remove. Wash and clean the RPE if it is reusable. Discard disposable RPE as asbestos waste. Underclothes (eg swimwear) should be removed and washed or disposed of as asbestos waste. Shower thoroughly. Wash footwear.

Enter the clean end carrying footwear and reusable RPE (and washed swimwear if appropriate). Dry off and put on the normal clothing that was deposited there at the outset of the job.

The procedures in the DCU are shown pictorially in Figure 9.5.

Part 4: Technical appendices

APPENDIX 1
Fibres in air: Sampling and evaluation of fibres by phase contrast microscopy

Nomenclature, appearance and regulation

A1.1 A population of airborne asbestos fibres, when viewed under a microscope, will often appear to contain many thin (<1 µm wide) parallel-sided fibres and may also contain bundles of parallel fibres, split fibres, curved or wavy fibres and even matted masses. For regulatory purposes, a countable (ie 'regulatory') fibre is defined as any object that is longer than 5 µm, with average width less than 3 µm and having an aspect (length/width) ratio greater than 3:1.

Outline and use of the method

A1.2 The following method is used for the measurement of airborne fibre concentrations. The method is closely based on the World Health Organization (WHO) method. The WHO method applies to all fibre types and is applicable to the assessment of concentration of airborne fibres in the workplace – most commonly personal exposures. This guidance is designed to be used specifically to evaluate airborne concentrations of predominantly asbestos fibres from both personal and static samples. If a mixed fibre population is likely (eg where there is no strong nearby source of asbestos fibres present or the material being disturbed may contain other types of fibres) or suspected after the original count is completed, the fibre concentration obtained gives only an upper estimate of the asbestos concentration.

A1.3 Further discriminatory counting may be needed, using one or more of the techniques outlined in Appendix 4 to gain a more reliable assessment of the actual asbestos exposure. For example, this may be applicable to background sampling, leak (enclosure check) sampling, assessment of respirator sampling and reassurance sampling. It is not recommended that this be applied to clearance testing; since the determination of results above the clearance indicator demonstrates that the enclosure is not clean, even if some of the dust is non-asbestos. However, in exceptional circumstances it can be applied to clearance testing; these include asbestos removal operations after cleaning where non-asbestos dust is suspected of being drawn into the enclosure from operations outside and increasing the 'fibre' concentration (eg gypsum particles from plaster board, or machine-made mineral fibres (MMMF) from glass fibre insulation). This discrimination method should not be used for the assessment of compliance with the control limit for asbestos or with the occupational exposure limit for MMMF (see paragraph A1.5).

Principle

A1.4 A sample is collected by drawing a measured volume of air through a membrane filter by means of a sampling pump. The filter (or part of the filter) is mounted on a microscope slide and rendered transparent ('cleared'). Fibres of appropriate dimensions on a measured area of filter are counted visually using PCM and the number concentration of fibres in the air calculated.

Scope and limitations

A1.5 The method measures the airborne concentration of all visible countable fibres using PCM. It should be noted that it does **not** specifically measure airborne **asbestos** fibres. Countable fibres have defined dimensions (see paragraph A1.1). Chrysotile fibres having widths <0.2 µm may not be easily visible using this method,[52] and the PCM count represents only a proportion of the total number of fibres present. Therefore, the count is only an index of the numerical concentration of fibres and not an absolute measure of the number of fibres present. Some types of MMMFs which have very similar refractive indices to the mounted filter will not be visible and an alternative method (MDHS 59/2)[53] should be used for assessing MMMFs. As part of the UKAS accreditation requirement, laboratories will need to produce their own documented in-house method for air sampling and fibre counting.

Fibre discrimination

A1.6 As emphasised already, this PCM method does not identify the fibre type present and alternative analytical methods to help assess the asbestos concentration are given in Appendix 4. To carry out fibre discrimination, the laboratory will need to be accredited for the discrimination method, as well as PCM fibre counting.

Limit of detection and limit of quantification

A1.7 Particles sampled onto a filter have at best a random distribution. This means that the precision of the count is limited by the underlying Poisson statistics. The precision is usually expressed in terms of the confidence interval, which defines the upper and lower limits expected for a defined percentage of repeat counts. For example, 95% confidence limits mean that on average 19 of the 20 values from repeat counts on different areas of the same filter would be within the upper and lower limits. For low counts the lower confidence limit is 0, so a one-sided upper 95% confidence interval is used. For a count of 0 it is 95% probable that the true number is <3 fibres. Using the formula given in A1.41, the analytical sensitivity (based on counting one half-fibre in 200 graticule areas (the lowest count possible above zero), a sample volume of at least 480 litres and an effective diameter greater than 20 mm) is between 0.0002 and 0.0003 f/ml. However, due to the presence of some fibres on blank tested filters, the limit of detection (LOD) is ~0.003 f/ml and the limit of quantification (LOQ) of the method is 0.010 f/ml. This is equivalent to a count of 40 fibre ends (20 fibres) in 200 graticule areas on a 480-litre sample. In dusty environments it may only be possible to sample one-tenth of the volume of air so these values will be increased by a factor of 10. In clean environments with very low levels of dust it may be possible to sample a factor of 10 or more and reduce these values accordingly.

A1.8 The Regular Interlaboratory Counting Exchanges (RICE) quality control scheme has shown that blank filter counts by PCM are low. Forty blank filter samples included in the RICE comparisons,[54, 55] had reference counts ranging from 0.3 f/mm^2 to 2.5 f/mm^2. Only 7 of the 2204 results (0.32%) had concentrations outside the acceptable limits (performance band B). These results were obtained from counts of 200 fields and showed that on average <1 fibre per 100 fields was counted. This gives an upper 95% confidence limit that <5 fibres will be counted in 100 fields and similarly <6.5 fibres in 200 fields. This relates to the 'blank' count in paragraph A1.30, so that it can be argued that 5 fibres per 100 graticule areas should be regarded as the lowest reliably detectable count above background (LOD). For a sample volume of 240 litres and 100 fields counted this corresponds to a calculated result of ~0.01 f/ml in the air. A sample volume of 480 litres with 200 fields counted corresponds to a calculated result of 0.003 f/ml.

A1.9 A further analysis of the raw data (after the removal of outliers) was also carried out using two methods. The standard method for defining the LOD and LOQ is based on 3 and 10 standard deviations (5.28 and 17.6 fibres, respectively). The second method uses the underlying definitions on which the above are based, where the LOD is the 99th percentile from 0 and the LOQ is determined within a +30% accuracy (7.6 and 25.3 fibres, respectively). The results from the above analyses of the blank data are therefore consistent with the aim to count at least 20 fibres in 200 fields when measuring low concentrations and, for consistency and uniformity of reporting, this should be used to calculate the LOQ. If the sample volume is below 480 litres or the number of graticule areas counted is less than 200, the LOQ must be calculated accordingly and reported as appropriate (see paragraph A1.41). While these values are 'typical' it is important to note that some batches of filters have occasionally been found to give much higher blank counts for a number of reasons and sample media blanks from each batch of filters should be checked before use.

Reagents

A1.10 Acetone and glycerol triacetate ('triacetin') are required for filter clearance. Analytical grade reagents are not essential, but they must be clean and free from fibres. Excessive water in the acetone may reduce filter clarity. The triacetin should be free from moisture and with no evidence of hydrolysis (possibly indicated by a smell of acetic acid) or other contamination.

Sampling equipment

A1.11 To comply with the WHO standard method, an open-faced filter holder fitted with an electrically conducting cylindrical cowl and exposing a circular area of filter at least 20 mm in diameter should be used for sampling. Normally the cowl should extend 1.5–3.0 times the effective filter diameter in front of the filter. Several manufacturers produce injection moulded conductive plastic sampling heads, which are pre-loaded with a suitable filter (see Figure A1.1). Alternatively, metal cowls with a PTFE O-ring can be purchased (see Figure A1.2). A cowled filter holder is intended to protect the filter, while still permitting a uniform deposit. The cowl is pointed downwards during sampling. Flexible tubing is required to connect the filter holder to the pump, and a cap or bung is needed for the cowl entrance to protect the filter from contamination during transport. Different filter diameters and shorter cowls can be used if they are shown to give comparable results but must be measured to determine the effective filter area.

A1.12 The exposed area of filter must be known and its diameter should be measured to the nearest millimetre (mm) (ie within ±5%) for each type of cowl or O-ring in use. A suitable method of measuring this is to use the filter holder and cowl to sample from a cloud of dark coloured dust. The filter is mounted on a slide in the usual way and the diameter measured using the microscope stage vernier by traversing at low magnification across the diameter of the dark area. Alternatively, the diameter can be measured with vernier callipers. At least two diameters should be measured at right angles, and a minimum of three filters from similar holders or O-rings should be checked in this way. (Differences between these six measurements of more than 1 mm may indicate either a poorly fitting filter holder or an unsatisfactory clearing technique.) An uneven appearance at one edge of the deposit or signs of dust outside the exposed areas indicates that there was a leak in the sampling head. If all of the sampling cowls are of the same type it is necessary to measure only a representative selection. The exposed filter area should be calculated to one decimal place.

A1.13 Membrane filters must be of mixed esters of cellulose or cellulose nitrate, of pore size 0.8 to 1.2 µm (optically clear grade). Preferably the filter should be 25 mm in diameter (minimum 20 mm) with a printed grid. Take care to avoid contamination when handling filters. Printed grids are on the sampling side of the filter and will be in the same plane as the particles collected and therefore provide a useful focussing aid. Any distortion of grid lines indicates poor mounting procedure.

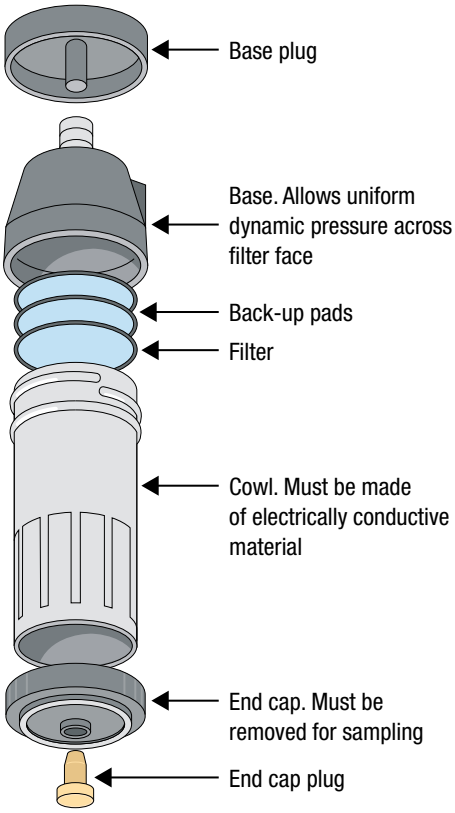

Figure A1.1 Exploded view of a personal sampling head

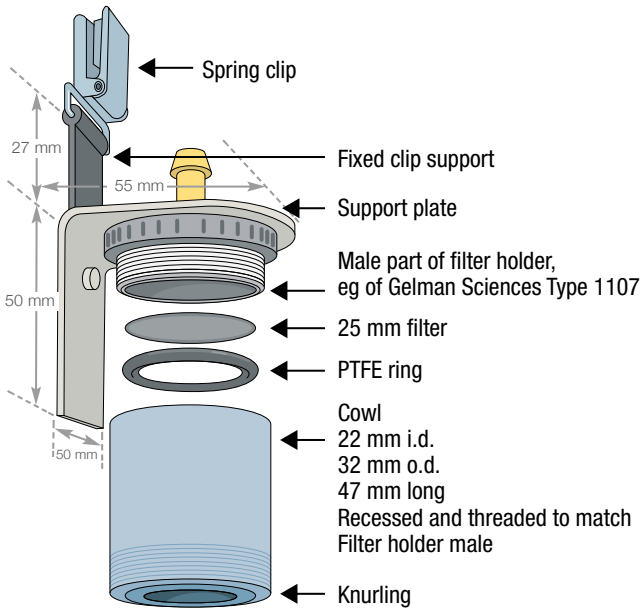

Figure A1.2 Exploded view of a personal sampling head with a metal cowl

A1.14 The pump must be capable of:

- giving a smooth airflow;
- having flow set to within ±10% for flow rates ≤2 litres.min^{-1} and within ±5% for flow rates >2 litres.min^{-1};
- maintaining this flow rate during the period of sampling.

These values include any change of flow rate with pump orientation. For personal sampling the pump should be light and portable, and capable of being fitted to a belt or carried in a pocket. The pump's battery must have sufficient power to operate within the specified flow limits for the duration of the measurement. If pumps for static samples are operated by mains electricity, regard must be given to appropriate safety precautions. Static sampling pumps should have the facility to enable the sampling head to be positioned 1–2 m above ground level.

Flow measurement

A1.15 The airflow must be measured by a working flow meter, sufficiently sensitive to be capable of measuring the appropriate flow rate to within the values specified in paragraph A1.14, and which has been calibrated against a primary standard. The flow meter incorporated in the pump may be used only if it meets the requirements above and it has been calibrated against a primary standard or a master flow meter with a loaded filter in line. Float-type flow meters should be vertical when read. Under normal operating conditions, the measurement of temperature and pressure is not necessary, as it will only make a small difference to the total uncertainty. In the UK, it is therefore **not** necessary to make corrections to sample volume due to changes in atmospheric temperature and pressure.

A1.16 The length of the flow meter tube, the range of airflow covered and the spacing and number of markings will directly affect the accuracy of reading and the calibration. To a large extent, the accuracy of the reading of the external flow meter is part of the pump performance assessment in paragraph A1.14, if it is used to check the flow rate. The airflow, and hence the float, must be sufficiently stable in the flow meter tube to enable a precise reading against the tube markings. From a practical point of view, to set the flow rate to ±10% at 0.5 litres.min^{-1} (the minimum recommended value), a minimum tube distance of 10 mm for each 1 litre.min^{-1} division is required. This means that the pump flow must be sufficiently stable and adjustable so the float must be able to be positioned and read to within ±0.5 mm of the 0.5 litres.min^{-1} flow mark. Longer distances between the markings and the markings at higher flow rates will give a proportional increase in the accuracy of reading. The flow should be set to within ±10% for flow rates ≤2 litres.min^{-1} and within ±5% for flow rates >2 litres.min^{-1}.

A1.17 A float-type flow meter tube must be marked with an appropriate number and scale of markings to allow the flow rate to be set within the limits defined in paragraph A1.14. Some rotameter-type flow meters have an integrated foam insert onto which the sampling cowl is pushed to check the flow rate. Due to the poor seal usually achieved using this system these rotameters are no longer recommended. If a master flow meter is used to calibrate the field flow meter the laboratory will need to demonstrate that the two flow meters can be read and used to give sufficient accuracy, so that airflows can be set to within the ranges specified in paragraph A1.14. This is usually achieved by having larger spacing between the airflow markings than the minimum values given above.

A1.18 Bubble flow meters and direct reading digital instruments measure the volume of air displaced by the pump directly and have advantages in that they do not need correction for changes in air pressure and temperature. Their accuracy of flow measurement is much better than a float-type flow meter if used within the specified range of airflows. It is important to make sure that there are no leaks or significant additional constrictions in the sampling train between the sampling head and the flow meter and that the inlet of the flow meter is to atmosphere. Otherwise, any flow meter will potentially give an erroneous value.

A1.19 The primary standard or master flow meter should be a flow meter whose accuracy is traceable to national standards. These should only be used for in-house calibration of the working flow meters and should be used paying careful attention to the conditions of the calibration certificate. The recalibration of the master and working flow meters should be related to the amount, type of use and any evidence that is available to show their stability over time. Procedures are given in the WHO method for in-house calibration against a bubble flow meter, although many prefer to send their master flow meters for recalibration to an accredited calibration laboratory.

A1.20 Master flow meters should be visually checked for damage every three months and calibrated to traceable national standards annually (see UKAS document LAB 30 for more details). The working flow meters should be calibrated monthly or quarterly (with necessary documentary evidence of at least one year to justify this longer interval). Records of the checks and calibrations should be kept.

Equipment for filter clearance

A1.21 Filter clearing should be accomplished by the acetone/triacetin hot block method (see Figure A1.3). A syringe is normally required to dispense the acetone; fine-tipped pipettes, or other suitable droppers, are needed to dispense triacetin.

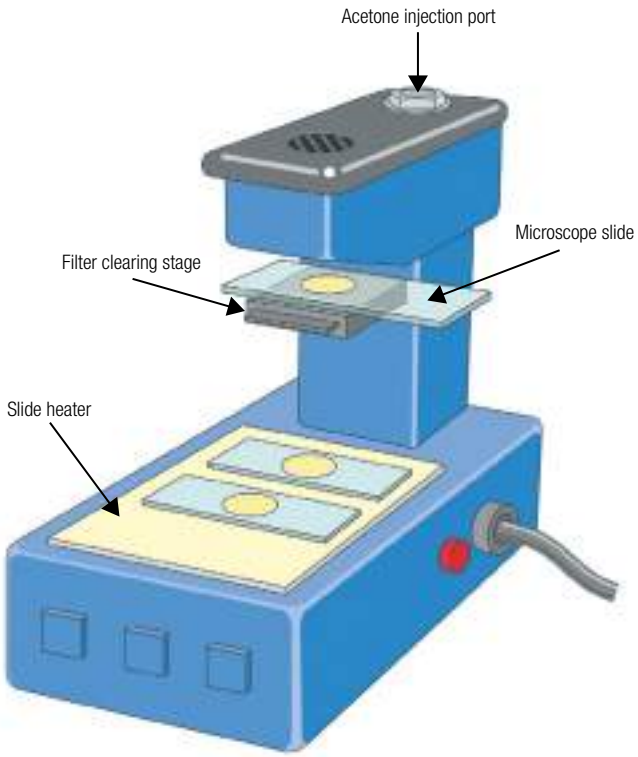

Figure A1.3 Example of a hot block for clearing filters

Microscopy

A1.22 The visibility of fine fibres by PCM is dependent on the transparency of the mounted filter, the quality and cleanliness of the microscope's optics, its correct use and maintenance, the operator's eyesight and other factors. Differences between the smallest fibre width observable by phase contrast microscopes will contribute to differences between counters (because fibre width distributions extend below the detection limit). To maintain a uniform level of detection at the limit of visibility the microscope and accessories should comply with the following specifications:

- A binocular stand with Köhler or Köhler-type illumination including a field iris. The condenser (sub-stage assembly), objectives and eyepieces specified below must all be compatible with each other and with this stand.
- A sub-stage assembly, incorporating an Abbé or an achromatic phase contrast condenser in a centrable focusing mount, with phase annulus centring independent of the condenser centring mechanism.
- A built-in mechanical stage with slide clamps and x-y displacement.
- A low-powered objective (eg 10x or 4x magnification), which is used for carrying out checks on the evenness of the dust deposit on the filter and locating the stage micrometer and test slide 'tramlines'.
- A positive-phase contrast objective (preferably par focal with the low-powered objective) of magnification 40x; the numerical aperture (NA) of this objective (which determines resolving power) must lie between 0.65 and 0.70; the phase ring absorption must lie between 65% and 85%.
- An optically matched pair of binocular eyepieces, preferably of the wide field, high eye-point type, providing a total magnification of at least 500x (one of the eyepieces must be of the focusing type and must permit insertion of a graticule).
  (Note: Some microscope stands may include a tube extension, which increases the total magnification. The total magnification is calculated by multiplying the objective, tube extension and eyepiece magnifications together. This total should not exceed 1000 times the NA.)
- A Walton-Beckett eyepiece graticule, 32 type G22, with an apparent diameter in the object plane of 100 ±2 µm (when checked against a calibrated stage micrometer) must be used to define the counting area.
- Various accessories including:
  - a phase telescope or Bertrand lens to ensure correct alignment of the phase rings;
  - a green filter (optional) which assists viewing (as the optics are optimised for green light);
  - a calibrated stage micrometer of 2 µm divisions (eg type S12);
  - an HSE mark II (green certificate) test slide (see Figure A1.4) or other HSE-approved test slide.

Figure A1.4 An HSE Mark II test slide as seen down a phase contrast microscope at 500x magnification

A1.23 The coverslip and slide will also affect the visibility of fine fibres. Both must be of glass and of appropriate thickness. Microscope slides must be of conventional type: eg approximately 76 mm × 25 mm and preferably 0.8 mm to 1.0 mm thick. The coverslip thickness is specified/marked on the objective (eg 0.17) and the appropriate thickness must be used (usually sold as 0.16–0.19 mm thick, eg No. 1½) and should be about 25 mm diameter or about 500 mm^2. The microscope slides and coverslips should be clean and fit for purpose.

Preparation of filter holders

A1.24 Before work starts suitable facilities must be available and agreed with the client/building occupier to make sure that:

- if a filter holder and cowl is being reused it can (and must) be cleaned before reuse;
- filters are loaded, unloaded and analysed in an area as free from fibre contamination as practicable;
- sampling cowls must not be loaded or filters mounted and counted inside the DCU.

If the sampling cowls are loaded or filters are changed close to the enclosure or asbestos work, background air tests should be collected to make sure the area is not contaminated. In addition:

- Care must be taken to handle the filter at all times with clean flat-tipped tweezers and only gripping the filter holder at the edge, outside the exposed area (as illustrated in Figure A1.5).
- The printed grid on the filter should be placed in the filter holder so that it faces towards the cowl.
- The entrance to the cowl should be closed with a protective cap or bung when sampling is not in progress.
- Push-fit cowls, particularly if they are reloaded, are prone to poor sealing and should always be checked for tightness. To improve the tightness of the seal, push the cowl entry down very firmly onto a hard surface with a slight rocking action (with the protective entry cap removed). Additional shrink seal bands to reduce the likelihood of leakage from push-fit cowls can be applied to the outside of the seal after loading. Screw-tightening cowls should always be checked for tightness before use. Over-tightening will damage the filter and cause leakage through the filter, whereas insufficient tightening would allow leakage around the edge of the filter.

Figure A1.5 Cowl being loaded with an MCE filter

Sampling period, flow rate and volume

A1.25 Sampling procedures and strategies should be designed where possible to give sample densities within the range for optimum accuracy (100–650 f/mm^2) or to make sure that the minimum LOQ is based on at least 20 fibres. The recommended flow rates and sampling times for various sampling strategies are given in Table 5.2.

Pump preparation

A1.26 Pumps with poor flow control may change their flow rate during the initial warm-up period. To stabilise the flow rate, some pumps may need to be run for 10–15 minutes before resetting the flow rate unless there is evidence (eg sampling data and/or manufacturer's instructions) to show that this is unnecessary with the type of pump in use. A separate filter and filter holder should be dedicated to this, and may be used for several pumps before being discarded (the flow rate of a pump being measured is shown in Figure A1.6). Pumps should be capable of maintaining flow for the intended sampling period (eg up to 4 hours). Particular care should be taken with short-period samples because flow instability at the start may have a significant effect on the apparent volume collected.

Figure A1.6 Flow rate of pump being measured

Sampling

A1.27 For personal sampling:

- The filter holder should point downwards and be fixed to the worker's clothing (eg upper lapel, hood or shoulder), as close to the mouth and nose as practicable, and preferably within 200 mm.
- Where there may be localised concentrations the sampling head should be positioned on the side expected to give the higher result.
- If a respirator is worn, the sampling head should be positioned away from the clean exhaust air.
- Static samples are taken using a downward-pointing filter holder positioned some 1–2 m above floor level and away from any walls or large obstructions.
- Each filter holder should be uniquely identified, recording the person or position it is used to sample, along with the date and other relevant site information (eg the type of activity taking place and any environmental factors that may affect the results).

Sampling method – time and flow rate recording and volume calculation

A1.28 Before the start of the sampling period:

- Any protective cap must be removed from the filter holder, which should be connected to the sampling pump (see Figures 5.1, 5.2 and A1.1).
- The pump is switched on to warm up, to achieve a stable flow rate as required by paragraph A1.26.
- If necessary, the filter cassette used for the warm-up should be changed for the field sampling cassette (see paragraph A1.26).
- The flow rate is set to the flow required (see Table 5.2) using the working flow meter as in paragraph A1.15. Table 5.2 also gives the recommended sampling times.
- The pump should be switched off and placed in the sampling location (Note: pump should be used almost immediately to avoid repeating the stabilisation process) (see paragraph A1.27).

At the start of the sampling period:

- The pump is switched on and the time and flow rate recorded, along with the sampling location and relevant contextual information (see paragraphs A1.27 and A1.48–A1.49).
- It is good practice to remeasure the flow rate into the filter cassette, shortly after the beginning of the sampling period, to check that the sampling train is assembled and leak-tight.
- For personal samples inside an active enclosure, the analyst may only be able to measure the flow rate just before entry and on exit of the worker.

During the sampling period:

- For longer sampling times (>1 hour), periodic checking and adjustment of the flow rate can be made. When done, this should be recorded and used in the calculation of the average flow and sampled volume (see Box A1.1).
- If a filter cassette looks like it is becoming overloaded with particulates, or damaged, it should be exchanged. The field flow meter should be used to check that the flow into the new filter cassette inlet is similar (within ±5%) and free from leaks.
- Pumps that also measure and record the back pressure can also be used to assess the absence of leakage, if the recorded back pressure is consistent with the type of filter in use.

At the end of the sampling period:

- The flow rate should be remeasured, using the working flow meter before the pump is stopped and the protective cap replaced on the filter holder, for transport.
- The time of switching off the pump and the final flow rate should be recorded.
- The sampling period must be measured to within ±2.5%.

The flow variation between the start and the end of the sampling period should be maintained as appropriate (ie to within ±10% for flow rates ≤2 litres.min^{-1} and within ±5% for flow rates >2 litres.min^{-1}) or the sample rejected. In exceptional circumstances, when it is not possible to resample, an estimated indicative value of a rejected sample can be given along with the actual measured difference in flow rate. The volume of air sampled is calculated based on the average flow rate and sampling duration (see Box A1.1). Smart pumps equipped with a flow meter, constant flow adjustment and data loggers will automatically record this sampling information and calculate the total air volume sampled over the sampling period/s.

Box A1.1 Worked example of the calculation of the total volume of air sampled from several flow rate measurements

The total volume of air sampled (V) is calculated by summing the calculated average volume for each time period sampled using:

$$V = \frac{(f_1 + f_0)}{2.(t_1 - t_0)} + \frac{(f_2 + f_1)}{2.(t_2 - t_1)} + \frac{(f_3 + f_2)}{2.(t_3 - t_2)} + \frac{(f_4 + f_3)}{2.(t_4 - t_3)} + \frac{(f_n + f_{n-1})}{2.(t_n - t_{n-1})}$$

Where f = the measured flow rate at each time (t)

The example below shows measurement of a personal sample, where a **±5% change in flow is measured at different time periods**. Based on the first and last measurement an average of 0.97 litres/minute for 240 minutes gives a sample volume of 232.8 litres; some 4.2% less than the calculated volume based on several measurements at different time periods.

Time period since first measurement (minutes)	Flow rate recorded (l/minute)	Number of minutes in each period	Average flow rate by period (l/minute)	Volume sampled (litres)
0	0.99	0	0	0
65	1.05	65	1.02	66.3
120	1.03	55	1.04	57.2
170	1.01	50	1.02	51.0
240	0.95	70	0.98	68.6
Total		240		243.1

Filter handling and transportation

A1.29 The preferred procedure is for the filter to be transported in the capped filter holder, but if for some reason this is not possible, the filter may be removed in a clean area and carefully placed (with exposed face upwards) in a clean tin or similar (conductive) container with a close-fitting lid. The filter should be handled with tweezers, which are used to grip the unexposed edges. If a tin or container is used for transport, unless it can be guaranteed that it will be carefully handled and remain upright, adhesive tape should be used to secure the clean unexposed edge of the filter to the container. The filter can be cut free for mounting and analysis using a surgical scalpel with a rolling action. Care must be taken not to contaminate the filter at any stage or to dislodge any deposit. The filter holder and cowl or the container must be thoroughly cleaned and dried before reuse.

Blanks

A1.30 There are three types of blanks, ie sampling media blanks, field blanks and laboratory blanks:

- **Sampling media blanks** are essential and are generated when filters are extracted from a box of unused filters. They are mounted and counted before sampling to check that the batch of filters is satisfactory; the initial procedure is to select at least 4 blank filters from each manufacturer's batch (or a minimum of 1% from larger batches) before the filters are used. The average blank filter counts should not exceed 3 fibres per mm^2 (eg 5 fibres per 200 fields). If laboratory records show that the proportion is consistently higher, the causes (including the source of supply) should be investigated. Over the years there have been periodic high background counts on several filter types and filter batches. The manufacturer's own field blank counts (if supplied) have not always been shown to be reliable and as mounting may also contribute fibres, laboratories should generate their own quality assurance data.

- **Field blanks** are essential and are generated when filters are taken from satisfactory batches to the sampling area and subjected to the same treatment as filters used for sampling. The filters in capped, cowled heads are taken to the sampling area without having air drawn through them and without them being attached to the pump (the cap is removed and replaced after a few seconds). A field blank should normally be nominated for each job or, for longer jobs, each day of sampling activity undertaken. All blank samples must be mounted and retained alongside the actual samples. Field blanks only need to be counted if any of the actual samples have more than 20 fibres counted. If counts on field blanks are high (ie more than 20 fibres counted) reject all filters and resample.
- **Laboratory blanks** are generated when filters, extracted from satisfactory filter batches, are mounted and counted to check for laboratory contamination if a field blank has indicated a need for investigation. A laboratory blank may be evaluated with each batch of routine samples, or afterwards, if contamination due to laboratory sources is suspected.

A1.31 The type and number of blanks that are available for analysis and are analysed will depend on a number of factors. Sampling media blanks are analysed before sampling to check that they are suitable for use. The sampling organisation is responsible for initiating field blanks and these should be labelled to make sure they can be identified. The source of any blank contamination should be investigated and the batch-to-batch consistency of membrane filters monitored. **Blank counts must not be subtracted from sample counts.**

(Note: the WHO method calls for subtraction of the blank count but this guidance has not been adopted.) Evidence shows that the blank count should normally be low and make little difference to compliance measurements based on >20 fibres (40 ends). For low fibre counts the precision becomes increasingly poor and subtraction of two low counts with relatively wide confidence intervals is unlikely to give reliable results (eg a count of 4 fibres has 95% confidence interval of 1–10 fibres). Subtraction can be used as an exceptional additional stage if contamination on any of the individual field or laboratory blanks has been found to exceed 8 fibres per mm^2 and it is not possible to resample. In these situations, the report must contain both the original and the subtracted count results and make clear that a subtraction procedure has been used due to the high level of contamination of the blank filters.

Filter clearing and mounting

A1.32 If additional analytical work to discriminate between fibre types is required (see Appendix 4), then samples and blank filters may be cut in half with a scalpel using a rolling action, with the filter carefully held at the edge. Half of the filter can then be mounted, and the other half suitably stored and kept for subsequent investigation if necessary. All samples and sub-samples must be uniquely labelled.

A1.33 **The acetone-triacetin mounting method must be used**. The principle is that condensing acetone vapour collapses the filter pores and the filter is adhered to the glass slide. The filter becomes transparent during this process and any asbestos fibres are contained close to the upper surface. Triacetin is used to provide the interface between the collapsed filter and the coverslip. If the mounted slide is stored horizontally it will keep for years without noticeable deterioration, although small-scale fibre movement may occur. If half-filters are mounted and excess triacetin is applied to form the mount these can be subject to slight changes in area over months. Slides should be stored carefully and not subjected to extremes of temperature. They should be preserved with all relevant records for at least **12** months so that the result can be checked if necessary.

A1.34 The filter to be mounted is placed centrally on a clean microscope slide, sample side upwards and preferably with grid lines parallel to the slide edges. It is important that the filter is free from excessive moisture as water interferes with the clearing process. If samples have been exposed to high humidity it may be necessary to dry the filters before mounting. The filters and containers can be placed in a warm air cabinet (without a fan), or slide warmer before mounting, making sure the lid of the container is at least partly removed to allow water vapour to escape. A ring of metal or inert plastic placed around the filter helps to localise the spread of acetone and improves the efficiency of clearing. The minimum volume of acetone to completely clear the filter should be used (~0.25 ml). The slide (which must be clean) is placed under the outlet orifice of the hot block (see Figure A1.7). The acetone is injected slowly into the hot block so that the vapour emerges in a steady stream over the filter. The filter should clear instantly. This small amount of acetone minimises fire and health risks.

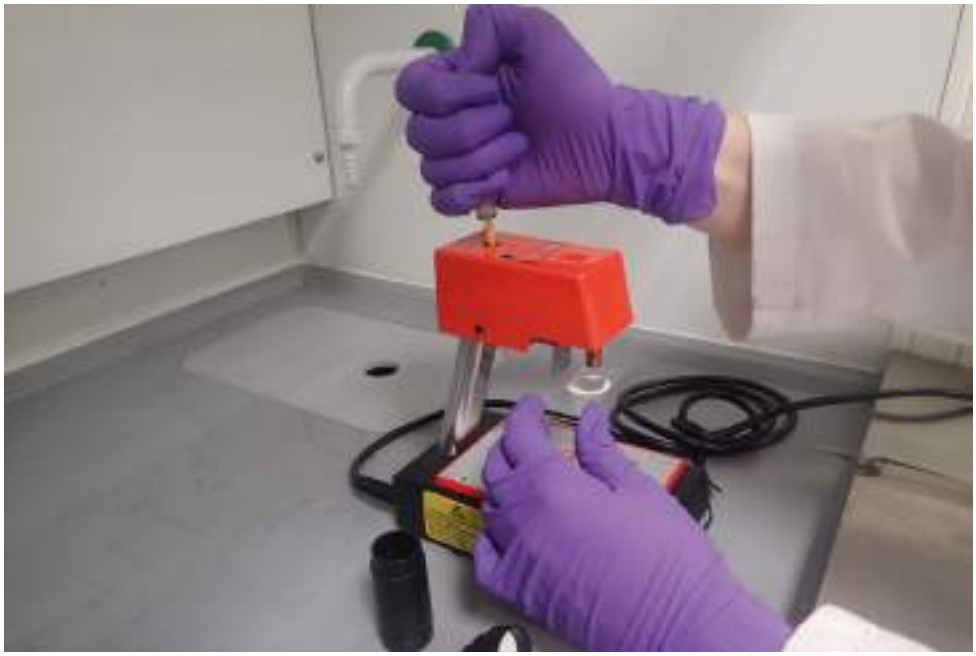

Figure A1.7 Hot block being used to clear a filter

A1.35 Acetone vapour is highly flammable and has low toxicity. The appropriate assessment and safety precautions should be taken before this procedure is used. All sources of ignition must be remote or excluded, and the acetone storage bottle should be stoppered when acetone is not being extracted. The procedure may be conducted in a fume cupboard to minimise inhalation of acetone vapour:

- The slide may be placed on a hot plate at 50–60°C for a few seconds to evaporate any excess acetone before applying triacetin and the coverslip.
- When the acetone has evaporated, a micropipette or other suitable dropper is used to place a drop of triacetin on the filter (~120 µl). This must be just enough to cover the filter when the coverslip is in place without overflow around the edges.
- The clean coverslip is lowered gently at an angle onto the filter so that all the air is expelled. It should not be pressed onto the filter, or moved, once it has been lowered into place.

A1.36 Excess triacetin can be carefully removed from the slide using a corner of a tissue (or similar), to absorb the excess fluid by capillary action.

The coverslip should not be touched or wiped in any way. At this stage the filter will still appear grainy under the microscope. If counting is to take place immediately, it should be placed on the hot plate (eg for up to 15 minutes at 50–60°C) to produce a more transparent mount. If left overnight at room temperature, the filter will 'clear' without any heating. The slide should be kept clean in a horizontal position (coverslip side up), until it is cleared and counted. Whenever further analysis or a fibre discrimination count is anticipated the filter should be cut in half before mounting and clearing. In these circumstances one half of the filter is mounted using the method described above while the other half is retained in a suitable labelled container. The recommended method for cutting filters is described in paragraph A1.29.

Evaluation

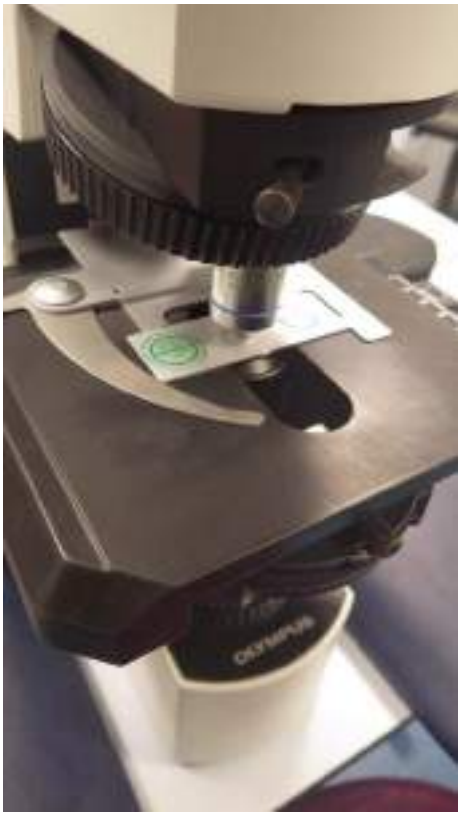

Figure A1.8 Test slide on a microscope

A1.37 The microscope must be adjusted and used according to the manufacturer's instructions and the analyst must check its performance at the beginning of each counting session (or more frequently if any adjustments have been made). A typical sequence for checking that the microscope is correctly adjusted is:

- Place, centre and focus the working stage micrometer, preferably using bright-field illumination. If necessary use the low-powered objective to help locate the 0–100 µm scale, then return to the 40x objective (Figure A1.8).
- Adjust field iris and condenser height to obtain Köhler or Köhler-type illumination.
- Check (and adjust if necessary) that the interocular distance is correct for the user, and any associated tube length correction, the image has sharp focus in both oculars and that the Walton-Beckett graticule is also in sharp focus.
- Measure and record the diameter of the Walton-Beckett graticule against the stage micrometer (it should be in the range of 98–102 µm). The measured diameter must be used in calculations.
- Remove the stage micrometer and replace with the HSE mark II test slide.
- Centre and focus the test slide using PCM (if necessary use dark field illumination and a low-powered objective to help locate the two sets of parallel grooves (tramlines) in which the test grating is located, before inserting the 40x phase objective).
- Check using a Bertrand lens or phase telescope that the phase rings are concentric and centred; adjust if necessary.
- Check and readjust the field iris and condenser height at the working magnification to obtain Köhler or Köhler-type illumination.
- Record which of the seven bands is just visible (lines only partly seen) by traversing from the most visible to the least visible.

- The ridges of block 5 of an HSE Mark II test slide (issued with a green certificate), must be visible, while only parts of block 6 ridges may be visible and none of block 7 ridges should be visible at the working magnification (see Figure A1.4). Other HSE test slides may also be used, provided that it can be demonstrated that they give equivalent results to the HSE Mark II test slide. [Note: In other parts of the world other test slides are in use, which have blocks of ridges of differing visibilities at the working magnification from 3 to 7; and these cannot be used in the UK.]
- The focus and condenser focus will need readjustment before each filter is counted.

Other sequences can be used provided all the necessary adjustments and checks are made.

A1.38 The mounted filter is placed on the microscope stage and examined with a low-power objective to check the uniformity of the deposit and that there is no gross aggregation of fibres or dust on the mounted filter. The filter should be discarded if it is badly non-uniform or overloaded with particles so that it is difficult to count. Fibres on the filter must be counted using at least 500x magnification. (Note: If higher magnifications are used they should not exceed 1000 times the numerical aperture of the objective lens.) The fine focus must be adjusted upwards and downwards by several micrometres at each new area to make sure that all fibres are seen (see Figure A1.9). The counting should proceed according to the following rules:

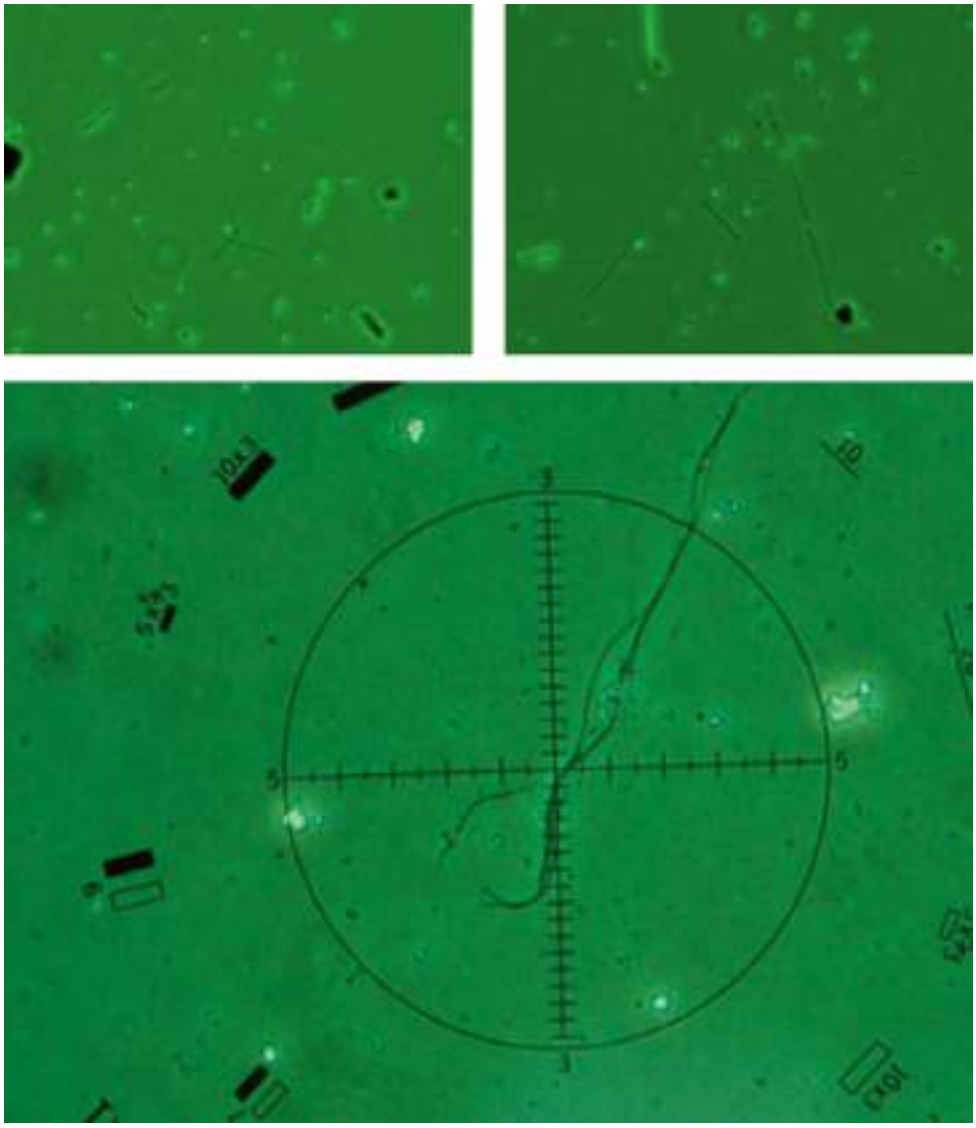

Figure A1.9 Asbestos fibres under PCM 40x objective

- Graticule areas for counting must be chosen at random to avoid bias and to be representative of the exposed filter area. Fields lying within 4 mm of the filter edge (or 2 mm of a cutting line) should not be counted. In practice it is easier to move in at least four fields of view from the filter edge before counting. Fields should be rejected if:
  - a filter grid line obstructs all or part of the field of view;
  - more than one-eighth of the graticule field area is occupied by an agglomerate of fibre and/or particles, by discrete particles or by air bubbles;
  - the analyst judges that fibres are so obscured that they cannot be counted reliably.

A1.39 If the analyst judges the sample to be uncountable or biased or the number of rejected fields exceeds 10% of the number accepted, this should be noted in the final report.

A1.40 A countable fibre is defined as any object that is longer than 5 µm, with an average width less than 3 µm and an aspect (length/width) ratio greater than 3:1 (fibres attached to particles are assessed as if the particle does not exist and are counted if the visible part of the fibre meets the above definition). The following recording rules apply:

- A countable fibre with both ends within the graticule area is recorded as one fibre.
- A countable fibre with only one end in the graticule area is recorded as half a fibre.
- A countable fibre passing through the graticule area, and having no ends within that area, is not counted.
- A split fibre is taken to be one countable fibre if it meets the definition above, otherwise it should be ignored; a split fibre is defined as an agglomerate of fibres which at one or more points on its length appears to be solid and undivided, but at other points appears to divide into separate strands; the width is measured across the undivided part, not across the split part.
- Loose agglomerates of fibres are counted individually if they can be distinguished sufficiently to determine that they meet the definition above.
- Fibres in a bundle and tight agglomerates of fibres, where no individual fibres meeting the definition of a countable fibre can be distinguished, are taken to be one countable fibre if the bundle or agglomerate as a whole meets the definition above.
- If the width of the fibre varies along its length, a representative average width should be considered.

Examples showing countable and non-countable fibres, and which display one or more of the features described above, are given in Figure A1.10a–m.

A1.41 The minimum number of graticule areas counted depends on the sampling situation as follows:

- For evaluations related to personal sampling in connection with compliance sampling and the assessment of respirator protection, at least 100 fibres must be counted or 100 graticule areas must be inspected, whichever is reached first; at least 20 graticule areas must be inspected even if these contain more than 100 fibres.
- For 4-stage clearance air sampling, **200 graticule areas must be inspected on samples of the minimum of 480-litre volume**. If the collected air volume (v) is more than 480 litres, the number (n) of graticule areas inspected may be reduced proportionately according to the formula $n = 96\,000 / v$ (where 96 000 is derived from 480 litres × 200 graticule areas). It may not be necessary to examine n graticule areas if a total of 40 ends (20 fibres) are reached.
- If the area being disturbed (eg an unsealed concrete floor) gives rise to significant levels of dust, two or more replicate samples of the same volume for each sampling position may be collected (eg two samples of 240 litres) and pooled to obtain 480 litres so the clearance indicator pass/fail criteria can be applied to each sampling point.

- For evaluation of other samples (eg background, reassurance and leak sampling), at least **200 graticule areas must be inspected on samples of the minimum of 480-litre volume**. The same procedures as for 4-stage clearance sampling can be applied if measurements are made to the same minimum LOQ (0.010 f/ml) but for greater sensitivity higher volumes of air should be sampled and analysed and/or a pooled average for several samples calculated.

a

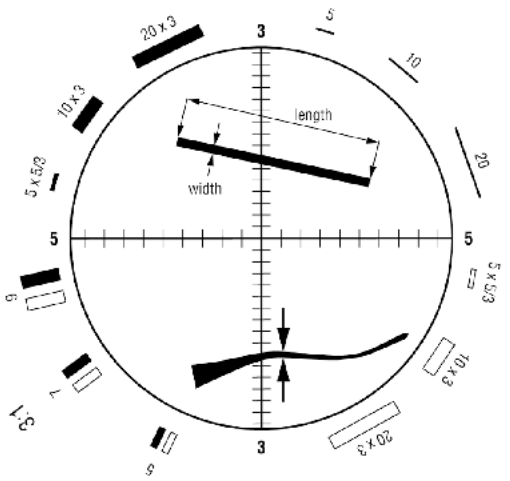

1 fibre; meets length, width and aspect ratio criteria

1 fibre; the width being measured at the 'average' point

b

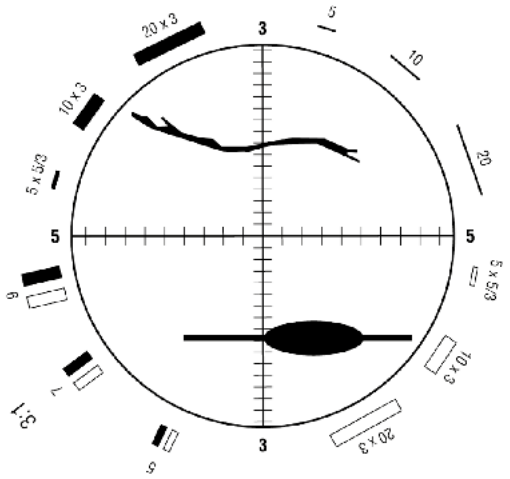

1 fibre

1 fibre; ignore the particle or 'bulb' of resin when estimating the width

c

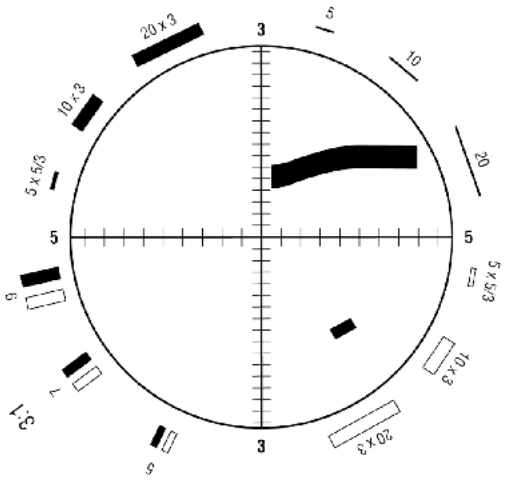

0 fibres; width too large

0 fibres; aspect ratio is less than 3:1

Figure A1.10 a–c Examples of fibre counting rules for single fibres

d

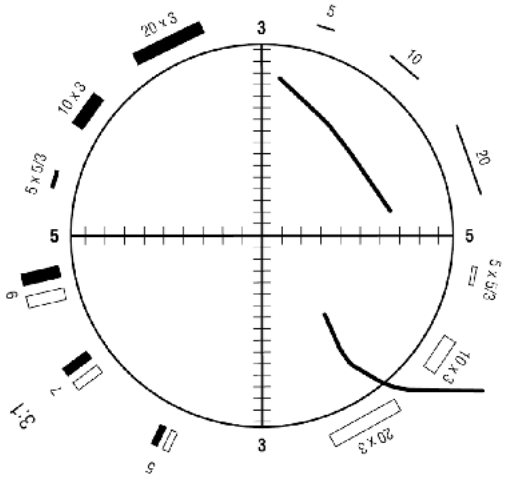

1 fibre;
entire fibre in field

½ fibre;
1 end in field

e

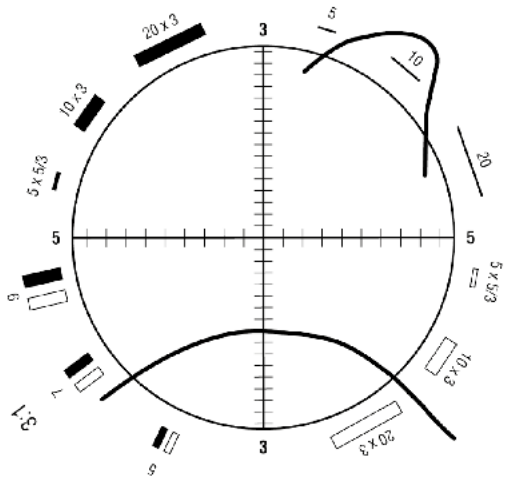

1 fibre; both ends in field

0 fibres;
no ends in field

f

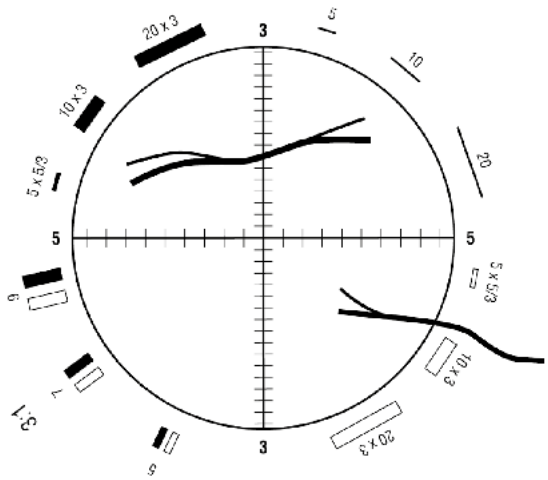

1 fibre;
split ends part of fibre

½ fibre;
2 fibre ends split,
count as 1 end

Figure A1.10 d–f Examples of fibre-counting rules: for fibres within graticule area and split fibres

g

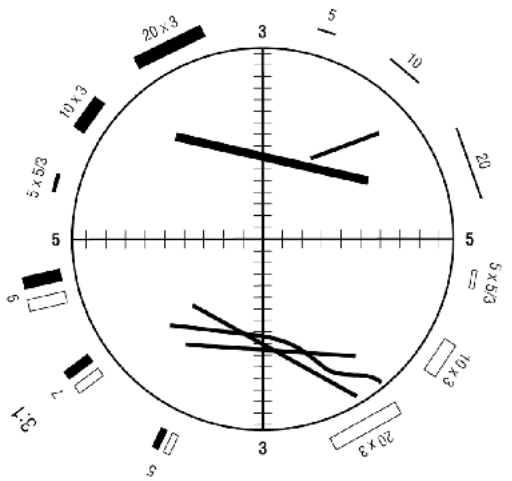

2 fibres

3 fibres

h

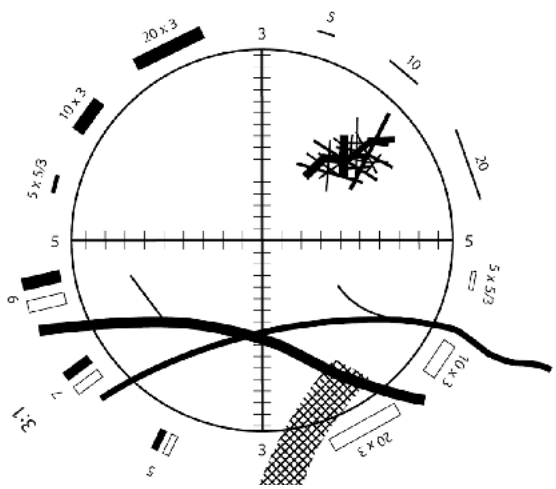

0 fibres

0 fibres

Figure A1.10 g–h Examples of fibre-counting rules for grouped fibres

i

1 fibre

½ fibre

Figure A1.10i Example of fibre-counting rules for fibres in contact with other particles

j

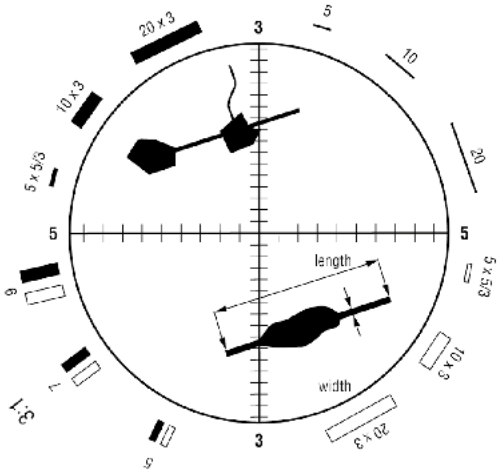

2 fibres

1 fibre

k

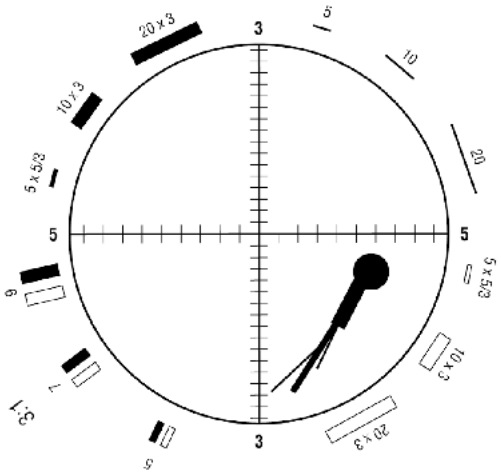

0 fibres

l

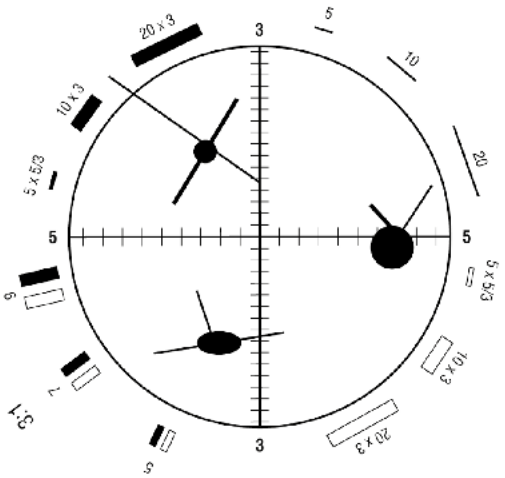

1½ fibres

2 fibres

2 fibres

Figure A1.10 j–l Examples of fibre-counting rules for fibres in contact with other particles

m

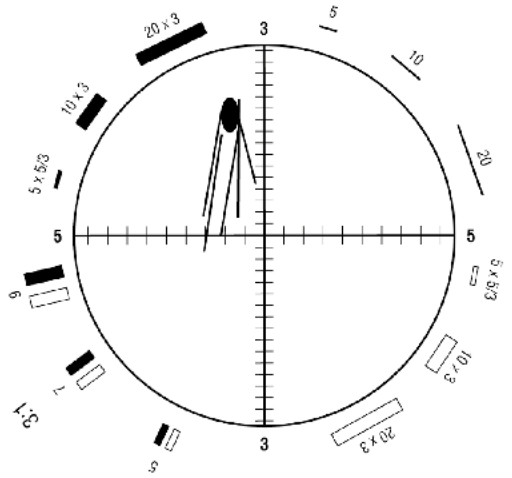

5 fibres

Figure A1.10 m Example of fibre-counting rules for fibres in contact with other particles

Calculation of results

A1.42 The airborne respirable fibre concentration for individual samples is given by the following formula:

$C = 1000\ N\ D^2\ /\ V\ n\ d^2$ fibres per millilitre (f/ml)

Where N is the number of fibres counted

n is the number of graticule areas examined

D (mm) is the diameter of the exposed filter area

d (µm) is the diameter of the Walton-Beckett graticule

V (litres) is the volume of air sampled through the filter.

A1.43 The concentration result must be calculated and recorded correct to the appropriate number of decimal places, depending on the reasons for sampling and the decision being made; eg to determine whether the 0.1 f/ml control limit is exceeded, calculate and report to 2 decimal places. For the clearance indicator where the fibre level should be less than 0.010 f/ml, calculate and report the result to 3 decimal places.

Calculation of the time-weighted average and pooled average

A1.44 Compliance with the UK's statutory control limit is determined by personal exposure measurement over a 4-hour period (referred to as a 4-hour time-weighted average (TWA)). Ideally, a continuous 4-hour sample is taken but in many circumstances this may not be possible: due to shorter shifts or smaller jobs (eg small asbestos removal and maintenance jobs) or, in other situations, if the concentration of airborne dust present is too high to obtain a countable filter. In some circumstances additional serial samples can be taken by the analyst to obtain a representative 4-hour TWA exposure measurement. In situations when further sampling is not possible a realistic assumption about the likely exposure for the remaining time may have to be made (eg that little or no further exposure took place).

A1.45 Time-weighted averages are used to calculate the exposure over a set time period (eg 4-hour control limit) using two or more individual serial results of different duration. Equation 2 shows how to calculate the 4-hour TWA from more than one concentration within any 24-hour period:

$$\text{4hr-TWA (f/ml)} = \frac{(F1 \times T1) + (F2 \times T2) = \ldots (Fn \times Tn)}{4} \qquad \text{(Equation 2)}$$

Where F is the fibre concentration (f/ml) and T is the time for that exposure (hours) for each serial sampling period (n).

Other examples of how to calculate the 4-hour TWA in different work situations are given in Box A1.2. It is important to note that the time T should be expressed in units of hours, so that if a sample time of 66 minutes was used for the first period $T1$ = (60+6)/60 = 1.1 hours and 2 hours 25 minutes was used for the second period $T2$ = (60+60+25)/60 = 2.42 hours.

Box A1.2 Calculation of time-weighted average concentrations

Example 1
A worker is exposed to 0.20 f/ml for 2 hours 30 minutes. There is no further exposure. The 4-hour TWA is therefore 2 hours 30 minutes at 0.20 f/ml ($F1$ x $T1$) plus 1 hour 30 minutes at 0.00 f/ml ($F2$ x $T2$).

The calculation is as follows:

$$\frac{(0.20 \times 2.5) + (0 \times 1.5)}{4} = 0.125 \text{ f/ml}$$

Note: 2 hours 30 minutes = 2.5 hours

Example 2
A maintenance worker during the day carries out three different repairs to asbestos-containing heaters. The three repairs take 30 minutes, 45 minutes and 2 hours 45 minutes and the reported concentrations are 0.15, 0.1 and 0.06 f/ml, respectively. The 4-hour TWA (f/ml) =

$$\frac{(0.15 \text{ x } 0.5)+(0.1 \text{ x } 0.75)+(0.06 \text{ x } 2.75)}{4} = \frac{0.075+0.075+0.165}{4} = \frac{0.315}{4} = 0.079 \text{ f/ml}$$

Example 3
An asbestos worker removes AIB for 4 hours but the sampling period is only 3 hours 20 minutes. The measured result is 1.2 f/ml over 3 hours 20 minutes. Assume that the fibre levels during the non-sampling period were the same as the sampling period. The 4-hour TWA (f/ml) =

$$\frac{(1.2 \text{ x } 3.33) + (1.2 \text{ x } 0.66)}{4} = \frac{4 + 0.8}{4} = \frac{4.8}{4} = 1.2 \text{ f/ml}$$

A1.46 There are situations where two or more static samples can be combined to give a more representative estimate of the average fibre concentration and/or an improved analytical sensitivity. This may be done only when **not** carrying out sampling to assess compliance with the control limit or during the 4-stage clearance procedure. The raw data from several samples can be pooled to calculate a pooled average when monitoring a common activity over a longer time period and/or similar areas to take better account of variations over time and position etc. For example:

- When several static air samples are taken to assess the background concentration of fibres in several similar rooms in the same building, a simple numerical average can be calculated from the individual concentrations reported. This is only an unbiased average if the ideal situation was present (ie the same sample volume is collected over the same time period and the same area of filter was analysed for each sample). Often for good reasons a set of samples from the same area may have different sampling times, flow rates and volumes of air collected and it is necessary to use the raw data to calculate the pooled average.

- For PCM counts this can be useful if only a few fibres are counted for each sample, as individual results are reported as below the LOQ (ie less than a count of 20 fibres). If five identical side-by-side samples were collected in the same room and the total numbers of fibres counted was 20, the pooled average can be calculated for the room. When the same 5 samples are taken sequentially or repeated over 5 days and a total of 20 fibres are counted the same pooled average would be calculated for the longer exposure period.
- A record should be made of why a pooled average has been calculated, with details of selection of samples used including individual sample results and the raw data used. A pooled average is often of more use when additional fibre discrimination is carried out (see Appendix 4) to assess the number of asbestos fibres, as PCM blank filter counts will limit the use of pooling samples to give improved sensitivity.

A1.47 Assuming the same microscope is used and the same number of graticules are inspected on each filter and the same filter area is exposed, the pooled average is calculated by substituting into Equation 1 (see paragraph 5.14) the sum of the volumes of air sampled ($\sum V$) and the sum of the fibres counted ($\sum N$) on the pooled filters (see Box A.1.3 for worked examples).

Recording and reporting results

Box A1.3 Examples of calculating a pooled average (C_p)

Example 1
Five replicate background samples of the same volume (960 l) are collected at approximately the same time (ie in parallel) in a large building before the planned work starts. The same filter holders (22 mm exposed diameter) and microscope were used to count 200 graticules of 100 µm diameter. The PCM fibre counts recorded were 3, 7, 11, 2 and 7. Each individual count would be reported as <0.005 f/ml (based on <20 fibres seen) but the pooled average is:

$C_p = 1000 \sum N D^2 / \sum V n d^2$ (f/ml) (where $\sum N = 30$ and $\sum V = 4800$)

$C_p = (1000\times30\times22^2) / (4800\times200\times100^2) = 1\times452\times10^7 / 96\times10^9 = 0.0015$ f/ml

Example 2
In situations where there may be a range of dust levels, side-by-side samples may be taken at different flow rates to ensure that a countable sample is achieved. If position 1 has 480- and 960-litre samples collected, which give counts of 7 and 18 fibres respectively, and at position 2 only the 480-litre sample is countable with 12 fibres, the pooled average is:

$C_p = 1000 \sum N D^2 / \sum V n d^2$ (where $\sum N = 37$ and $\sum V = 1920$)

$C_p = (1000\times37\times22^2) / (1920\times200\times100^2) = 1\times791\times10^7 / 3\times84\times10^9 = 0.0047$ f/ml

Example 3
Sample 1 runs for 30 minutes at 8 litres per minute and sample 2 runs for 35 minutes at 8.2 litres per minute. Fifteen fibres were counted in 200 graticule areas for sample 1 and 19 fibres in 200 graticule areas for sample 2. The graticule diameter was 98 µm and the exposed filter area diameter was 20 mm.

$C_p = 1000 \sum N D^2 / \sum V n d^2$ (where $\sum N = 34$ and $\sum V = 570$)

$C_p = 1000\times34\times22^2 / 570\times200\times98^2 = 1\times647\times10^7 / 1\times095\times10^9 = 0.015$ f/ml

A1.48 Sampling records should be made and should include sufficient information to:

- identify the site and location;
- show the purpose of the sampling;
- establish the traceability of any calibrations;
- calculate the results and the LOD (Box A1.4) to ensure the quality of the sampling.

Analytical records should contain sufficient information to:

- establish the traceability of the calibrations;
- calculate the results reported;
- assure the quality of the analysis.

The resulting report should also include sufficient information on the sampling and analysis so the results are traceable and the purpose and outcome of the sampling are clear. Normally, results are also covered by a laboratory's UKAS accreditation (see CAR) and additional information (see LAB 30) may be required. Different individuals and organisations may carry out sampling and analysis and the analytical report should either attach or contain the appropriate sampling information. All test reports should conform to ISO/IEC/17025 requirements.

Box A1.4 Examples of limit of detection calculations for airborne asbestos concentrations

Example 1
A sample with a volume of 120 litres and 200 graticule areas counted has a detection limit of:

$$\frac{96{,}000}{120 \times 200} \times 0.01 = 0.04 \text{ f/ml}$$

Example 2
A sample with a volume of 240 litres and 200 graticule areas counted has a detection limit of:

$$\frac{96{,}000}{240 \times 200} \times 0.01 = 0.02 \text{ f/ml}$$

Example 3
Fifteen fibres were counted in 100 graticule areas, the graticule diameter was 98 µm, the exposed filter diameter was 22.0 mm and the sample volume was 240 litres.

The fibre concentration is calculated as:

$$1000 \times 15 \times 22^2 / 240 \times 100 \times 98^2 = 0.031 = 0.03 \text{ f/ml}$$

The detection limit for this sample is calculated as:

$$\frac{96{,}000}{120 \times 200} \times 0.01 = 0.04 \text{ f/ml}$$

A1.49 The analytical report or certificate should include the information listed in Table A1.1.

Table A1.1 Information to be included in the analytical report

Area	Details to be included
General details	Name or letterhead of the organisation carrying out the work
	Full postal address of the organisation and other electronic contacts
	UKAS accreditation symbol and number (and any appropriate disclaimer)
	Printed name(s) of the person(s) who carried out the work
	Printed name and signature of the person who authorised the release of the report (this may be the same person who carried out the work)
	Date the report was authorised for release
	A suitable report identifier or number
Sampling information	Location/s of the sampling (eg name and address)
	Date of sampling
	Type of sampling being carried out
	Sampling information for each sample including: ■ a unique identifier (eg sample number) ■ type of sample (eg personal or static and compliance, background, clearance) ■ position of the sample (eg the name of the person or location) ■ sampling time started and ended for each period ■ sampling flow rate ■ calculated volume of air sampled ■ reference to any specific activities or events taking place during the sampling (eg during demolition, immediately after demolition) ■ for personal sampling, contextual information is also required (see paragraphs 5.6–5.7). Personal data should be collected on template A6.3
Other details	Method of analysis used and for each sample
	Sample number
	Volume of each sample (if not given elsewhere)
	Number of fibres counted
	Number of graticule areas counted
	Calculated fibre concentration to three decimal places
	Reported fibre concentration (rounded down as appropriate)
	Limit of quantification

The report should clearly state that the reported result is for respirable fibres and not asbestos fibres. (Note: The reported concentration should not imply greater accuracy than can be justified by the LOQ, eg a 480-litre volume sample with 200 fields counted will be reported as <0.01 f/ml or rounded to two decimal places if ≥0.01 f/ml.) The report may also include the results of any TWA or pooled average (if calculated) and clearly identify which individual samples have been used to calculate these values.

A1.50 As well as containing the information reported, the sampling and analysis records may also include the items in Table A1.2.

Table A1.2 Information to be included in the sampling and analysis records

1	Sampling strategy, including any variations from standard procedures (eg for very dusty conditions, sampling times may need to be very short to prevent overloading and a stopwatch may give a more accurate measure of the sampling period)
2	Relevant environmental conditions which may significantly influence the results (eg fog or rainfall if sampling outside)
3	Type of filters in use and batch number
4	Type and identifier for the flow measurement device
5	Type and identifier for the air sampling pump
6	Identifier for the timing device
7	Measured flow rate at the start and end of each sampling period and any checks in between
8	Name/s of the analyst/s carrying out the sampling and fibre counting (if different)
9	Identifier for the stage micrometer
10	Identifier for the test slide
11	Measured diameter for the Walton-Beckett graticule
12	Block number where the gratings are still visible on the HSE test slide
13	Measured diameter and calculated area of exposed filter
14	Any additional information for the discrimination counting strategy (see Appendix 4)

Human factors

A1.51 Working practices and the working environment should be such as to avoid affecting the accuracy of the counts:

- Adjustable seating arrangements should provide sufficient legroom and clearance to allow adjustment for the analyst to sit in a well-supported, relaxed and comfortable manner avoiding neck and back strain.
- To avoid eye fatigue, the light intensity of the microscope and surroundings should be comfortable to view. Also, the ambient light should not be brighter than the microscope and should not reflect off the coverslip or optics or cause any other source of glare. Any peripheral view beyond the microscope should, if possible, be an unobstructed distant view in unchanging light. Alternatively, a matt background shield can be used.
- The microscope should be correctly adjusted. Adjustments of the interocular distance and for the different focal lengths of each eye are quick but important and should be carried out by the analyst at the beginning of each counting session. The eyes should not be too close to the oculars and if high eye-point wide-field binoculars are used people who do not wear glasses should make use of the eye shields. The microscope image should be sufficiently vibration-free that particles in the field of view are both steady and clear.

A1.52 Time limits must be placed on the amount of fibre counting undertaken by analysts in specified periods because fatigue can reduce the quality of counts. The number of graticule areas examined in any one shift by one counter should not normally exceed 2400, the equivalent of 12 samples if 200 graticule areas are examined on each. Analysts carrying out PCM counts are recommended to take a break at least after every third or fourth slide counted in succession (see Box A1.5), and if long shifts are worked, additional quality assurance (QA) measures may be necessary. The length and frequency of the fibre counting sessions will depend on the analyst, the type of samples and the laboratory conditions. The number of samples evaluated in a day also differs from analyst to analyst: typically, counters may take 10–15 minutes to evaluate a sample with a sparse dust deposit, but longer for greater numbers of fields and more difficult samples.

Box A1.5 Counting quality control

The number of graticule areas examined in any one shift by one counter should not normally exceed 2400, eg 12 samples of 200 graticule areas. Whenever these limits are exceeded all of the excess samples should be recounted, preferably by a different analyst.

Frequent breaks should be taken (eg every 3 or 4 samples). Additional quality assurance measures will be necessary where long shifts are worked.

Accuracy

A1.53 The true fibre concentration of a given dust cloud cannot be measured with absolute accuracy or certainty. Some information is available about relative bias associated with this method of sample evaluation. Analysts generally undercount dense deposits. When sampling fibres in atmospheres relatively free from interfering particulates, the density range for optimum accuracy should be in the range of 100–650 fibres/mm^2; [56] for densities above 650 fibres/mm^2 the results may be underestimates (but no attempt should be made to correct them). Above 1000 fibres/mm^2, fibre levels are subject to increased undercounting and are normally too dense to count. In mixed dust situations the presence of other fibres and particles may interfere with the accuracy of results. Chance superimposition of non-fibrous particles may cause fibres not to be counted fully, by a proportion, which depends on the mean size and concentration of the non-fibrous particles but not on the fibre concentration.[57] In practice, the effects of chance superimposition on counts are small compared with subjective effects and will not be important for the counting rules defined in this method. **An important factor is that the counting procedure can result in systematic differences in counts produced by different analysts within and, more particularly, between laboratories. These intra- and inter-laboratory differences must be controlled by proper training and periodic quality checks.**

Precision

A1.54 Counting precision depends on the number of fibres counted and on the uniformity of the fibre distribution on the filter. The latter may be described reasonably by the Poisson distribution. Theoretically the process of counting randomly distributed (Poisson) fibres gives a coefficient of variation (CV) = $1/N^{1/2}$, where N is the number of fibres counted. Therefore, the CV is 0.1 for 100 fibres and 0.32 for 10 fibres counted. In practice, however, the actual CV is greater than these theoretical numbers due to an additional component associated with subjective differences between repetitive counts by one analyst and between replicate counts by different microscopists. This CV is given approximately by the formula $(N + 0.04N^2)^{1/2}/N$, where N is the mean number of fibres per evaluation;[58] typical CV values are given in Table A1.3 and Figure A1.11 for intra-laboratory counts. If n fibres are found in a single evaluation, the mean of many repeated determinations on equal areas is expected to lie within the confidence limits $M_{97.5}$ and $M_{02.5}$ on 95% of occasions where:

$$(1 - 1.8^2Sr^2)M_{97.5}^2 - (2n + 1.8^2)M_{97.5} + n^2 = 0 \qquad \text{(Equation 3)}$$

$$(1 - 2.6^2Sr^2)M_{02.5}^2 - (2n + 2.6^2)M_{02.5} + n^2 = 0 \qquad \text{(Equation 4)}$$

A1.55 Equations 3 and 4 have been used to calculate the upper and lower confidence limits shown in Table A1.3. It can be seen from this that counting more than 100 fibres gives only a small increase in precision. Also, the method loses precision as fewer fibres are counted; this loss of precision increases as counts drop below about 10 fibres. Inter-laboratory CVs can be twice the intra-laboratory coefficients, or even greater if quality control is poor.

A1.56 If fewer than 20 fibres are counted, the calculated result will have an increased imprecision and it is normal to calculate and report the results as less than the LOQ (ie 20 fibres). In some circumstances it may be useful to calculate the actual result even if <20 fibres (40 fibre ends) are counted but any interpretation will have to take into account the level of precision of the counts on the actual filters and the associated blanks.

Table A1.3 Intra-laboratory coefficient of variation (CV) associated with number of fibres counted

Number of fibres	Expected CV	Expected 95% confidence limits for the mean of repeated determinations	
		Lower ($M_{02.5}$)	Upper ($M_{97.5}$)
5	0.49	1.64	13.01
7	0.43	2.66	16.38
10	0.37	4.81	21.32
20	0.30	10.34	37.41
50	0.25	29.66	84.77
100	0.22	62.59	163.16
200	0.21	128.87	319.67

Uncertainty budget

A1.57 The UKAS LAB 30 document, which gives guidance on ISO/IEC 17025, requires that the variation associated with each part of the measurement is used to calculate the overall uncertainty (also referred to in UKAS documents as total uncertainty and expanded uncertainty). Various levels of complexity[55, 59] are recommended, but the overall uncertainty for air monitoring of fibres is a function of the systematic, subjective and random errors associated with the air sampling and fibre counting. It is normal practice to represent the overall uncertainty in terms of the 95% confidence interval (this is equivalent to the standard uncertainty multiplied by a coverage factor of 2 for a normal distribution, ie ×2). In a first approximation, the uncertainty due to the systematic errors associated with the analysis is small when compared to the random errors due to the placement of the sampler and the random distribution of fibres on the filter. As fibre counting is carried out manually there is also a substantial subjective error that will vary with a whole range of factors for the same counter and between counters. Due to the large random and subjective variability associated with manual fibre counting and that the underlying random Poisson distribution is not symmetrical, the overall uncertainty can only be derived from repeated blind measurements of the same sample. The results from observations from within (intra-) laboratory counts are given in Table A1.3 and Figure A1.11. The uncertainty from between (inter-) laboratory counts is best represented by the RICE performance limits.

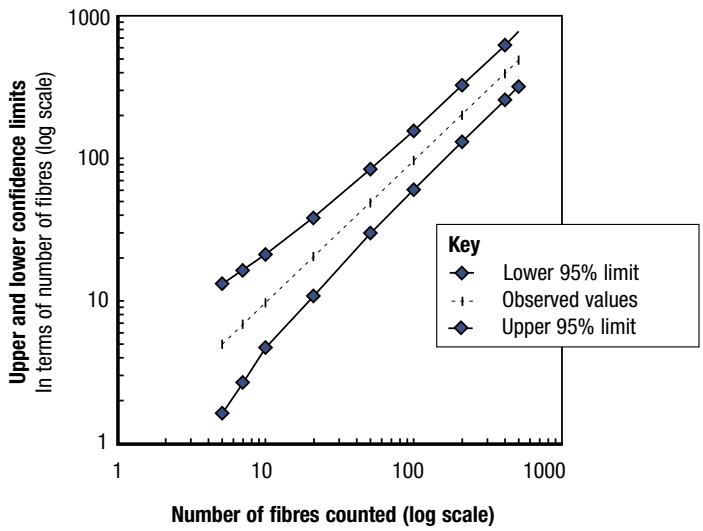

Figure A1.11 Graph of the calculated intra-laboratory confidence limits

A1.58 Examples of the factors that contribute to the systematic variability within a laboratory are given in Table A1.4. Both the maximum allowed variability as defined in the method and the typical values measured are evaluated. In some cases, a maximum variation has not been specified in the method and a value of 1% has been adopted. In practice, if the variation is <20% of the largest variable, it is usually regarded as negligible. It can be seen from Table A1.3 that the 95% confidence interval from fibre counting for a count of 20 fibres is between 48% and 187%. The systematic uncertainty from sampling and calibration is calculated (see Table A1.4) and combined with the fibre counting variables (see Table A1.5) using the root sum square method that treats all the variables as independent. As the maximum allowed systematic uncertainty in Table A1.4 is between ±26% of the mean count, this gives a calculated 95% confidence limit for the overall uncertainty of 55–191% of the average value. The more likely value of the systematic error calculated in Table A1.4 is ~11%. Even assuming the systematic error is the maximum allowed, the overall effect of the systematic errors is less than 20% of the fibre counting error for counts of up to 200 fibres (see last two columns of Table A1.5). This means all the systematic errors from calibrations, timing and flow measurement could be regarded as negligible, compared to the random and subjective errors from fibre counting and the 95% confidence limits derived from the equations in paragraph A1.54 and Table A1.3, and these adequately describe the overall uncertainty (see LAB 30 requirements).

Table A1.4 Example of an uncertainty budget for systematic variables

Variable	Maximum allowed variability ±%	Example of the measured variability ±%
Sampling variables		
Master flow meter calibration	1	0.5
Working flow meter calibration	3	1.9
Pump flow rate calibration	3	1.9
Pump flow rate variability	10	3
Rotameter readability (if used)	3	2.5
Time of sampling	2	1
Sampling uncertainty	11.5	4.9
Analysis variables		
Master stage micrometer	1	0.5
Calibration of sub-master	1	0
Calibration of graticule	2	0
Area of exposed filter	5	2
Analytical uncertainty	5.6	2.1
Overall systematic uncertainty	12.8	5.3
95% confidence interval	±25.6	±10.6

Note: When no figure was available or the figure was stated for the maximum allowed variability a value of 1% has been used. Existing calibration measurements have shown that there was no change in the master stage micrometer over the last 17 years and the total uncertainty for calibration of the sub-masters and the graticule over a long period was 0.

Table A1.5 Effect of random and systematic errors

Number of fibres	Maximum allowed systematic errors (±%)	95% confidence limit of fibre counts for random and subjective errors		Total uncertainty for fibre counts as a percentage of the count		Effect of the maximum systematic error as a percentage of the random and subjective errors	
		Lower	Upper	Lower	Upper	Lower	Upper
20	26	10.34	37.41	54.85	190.85	4.18	11.95
50	26	29.66	84.77	48.28	174.24	6.33	15.74
100	26	62.59	163.16	45.56	168.30	7.53	17.88
200	26	128.87	319.67	44.06	165.24	8.28	19.27

Quality control

A1.59 Employers who request air sampling and analysis of airborne asbestos must make sure that the laboratories are accredited by UKAS and so meet the standards set out in ISO/IEC 17025 and the competences in Appendix 9. Laboratories are responsible for ensuring the work is carried out by competent trained staff. Competences are acquired from on- and off-the-job training, gaining qualifications and ongoing performance monitoring by auditing, internal quality control schemes and proficiency testing. New staff will need relevant qualifications covering the appropriate competences. These qualifications include the RSPH Level 3 Award in Asbestos Air Monitoring and Clearance Procedures, and the BOHS proficiency modules P403 Air Sampling and Fibre Counting (PCM) and P404 Clearance Testing and the Requirements for a Certificate for Reoccupation. An acceptable alternative is the BOHS W504 module Asbestos and Other Fibres, together with the Certificate of Competence in Asbestos.

A1.60 Participation in internal and external quality control schemes is an essential part of quality assurance because of the potential for large differences in results within and between laboratories using manual fibre-counting methods. Accredited laboratories using this method therefore must participate in a suitable scheme such as the Regular Interlaboratory Counting Exchanges (RICE) scheme. This provides a measure of the laboratory's performance in relation to other counting laboratories. Participation in RICE must be supplemented by checks on internal consistency to measure and control the individual counter's performance relative to other counters in the laboratory. The internal quality control scheme should incorporate the use of reference samples (see UKAS document LAB 30, Appendix 1), including those which have been analysed in the course of normal work, and blanks. Participation and assessment of individual performance should be carried out at least once a month. Systematic records of quality control results must be maintained and the assessment of performance must be to a defined set of criteria.

A1.61 If it is suspected that an HSE test slide has deteriorated in quality due to damage or other factors, it should be re-evaluated. The HSE Science and Research Centre, Buxton, should be contacted for advice.

Advice

A1.62 Advice on this method may be obtained from the HSE Science and Research Centre (see Further information for contact details). Suggestions for improvement can also be sent.

APPENDIX 2
Determination of asbestos in bulk materials

INTRODUCTION

Definitions and nomenclature

A2.1 Asbestos is a general term used for the fibrous forms of several naturally occurring silicate minerals that have been exploited for their useful properties of flexibility, high tensile strength, incombustibility, low thermal conductivity, and resistance to chemical attack. ACM is an abbreviation used to describe a material that contains any of these regulated fibrous silicate minerals (ie asbestos-containing material). For regulatory purposes CAR defines asbestos as any of the following fibrous silicate minerals: chrysotile, crocidolite, amosite, asbestos anthophyllite, asbestos actinolite or asbestos tremolite (see Table A2.1), or any mixture of them. ACOP L143 also states that any mixture which contains one or more of these fibrous silicates at more than trace amounts (see paragraph A2.30 and Box A2.1) as defined in HSG248 is within the definition of asbestos of an ACM (see Chapter 7 and Appendix 7 for application to soils and made ground). The nomenclature and definitions used in this document to describe light microscope work are based on the *RMS Dictionary of light microscopy*;[60] a glossary of relevant terms can be found in Annex 1 of this appendix.

Mineralogy of asbestos

A2.2 Silicate minerals are classified by the number and arrangement of silicate tetrahedra in the repeating units of the crystal lattice.[61, 62] Chrysotile is classified as a sheet silicate and is a member of the serpentine group.[63] The other types of asbestos are chain silicates in the amphibole group of minerals. Rocks containing serpentine and amphiboles occur widely on the earth's surface, but only in rare circumstances have conditions favoured the formation of significant quantities (of the mineral as fibres and fibre bundles (ie asbestos)). Relatively low percentages of asbestos can be present in other mined products (such as talc and iron ore). Table A2.1 gives the asbestos and the non-asbestos varieties of the serpentine and the amphibole minerals together with nominal compositions.[64–67] Variations in cation composition not only define the amphibole types, but are also responsible for the observed differences in optical properties within each type. Analysts should be aware of such variations and their effects on observable refractive indices (RIs); see paragraphs A2.4 and A2.54.

Principle

A2.3 This appendix assumes that a representative sample of the suspected ACM has been collected for examination. In the analytical laboratory, this is examined by eye, followed by more detailed examination using a low-power stereo-microscope. One or more representative sub-samples may be prepared mechanically and/or chemically for further examination. Fibres observed in the course of these examinations are categorised tentatively on the basis of morphology and certain physical properties. Each fibre type so recognised is sampled by selecting a few fibres or

bundles, and these are mounted in a refractive index (RI) liquid chosen to match the most likely asbestos type. The fibres are then positively identified as one of the six regulated asbestos types on the basis of their detailed optical properties using polarised light microscopy (PLM) with magnifications from about 80x upwards, as appropriate to the type of sample. This basic procedure is used for all types of samples but further guidance is sometimes given (eg soil samples; see Appendix 7).

Table A2.1 Varieties of regulated asbestos, their non-asbestiform mineral analogues, and nominal compositions (adapted from Hodgson and Walton)

Asbestos variety and CAS number	Non-asbestos mineral analogue	Nominal composition
Serpentine group of minerals		
Chrysotile 12001-29-5	Lizardite, antigorite	$Mg_3(Si_2O_5)(OH)_4$
Amphibole group of minerals		
Crocidolite 12001-28-4	Riebeckite	$Na_2Fe_3^{2+}Fe_2^{3+}(Si_8O_{22})(OH)_2$
Amosite Asbestos grunerite 12172-73-5	Grunerite	$(Fe^{2+},Mg)_7(Si_8O_{22})(OH)_2$
Asbestos anthophyllite 77536-67-5	Anthophyllite	$(Mg,Fe^{2+})_7(Si_8O_{22})(OH)_2$
Asbestos actinolite 77536-66-4	Actinolite	$Ca_2(Fe^{2+},Mg)_5(Si_8O_{22})(OH)_2$
Asbestos tremolite 77536-68-6	Tremolite	$Ca_2Mg_5(Si_8O_{22})(OH)_2$

Note: CAS number is the number in the register of the Chemical Abstract Service (CAS)

Scope and limitations

A2.4 This appendix describes the identification of the six regulated commonly encountered types of asbestos by PLM (see paragraphs A2.7–A2.53) that were used commercially or occur as accessories to other minerals. Other non-regulated amphibole minerals are also known to occur in the asbestiform habit but their identification is not within the scope of this document. The method is suitable for most asbestos-containing materials, and can distinguish between asbestos fibres and elongate mineral fragments or other materials in almost all situations. However, difficulties may occur in:

- identifying fibres below about 1 μm width;
- distinguishing between tremolite and actinolite or between tremolite and anthophyllite (see paragraph A2.54).

In such cases, electron microscopy with energy dispersive X-ray analysis (EDXA) and/or electron diffraction techniques, X-ray diffraction or infra-red spectroscopy can be used to provide additional information (see Appendix 4). Also, information is given on asbestos that has been subjected to heat (see paragraph A2.59) and on other types of fibre which may be encountered (see paragraphs A2.60–A2.68).

A2.5 The surveying procedures and strategies to obtain bulk samples of suspected ACMs for analysis are described in HSG264.

Analytical sensitivity and limit of detection

A2.6 With careful application of this method, a single fibre may be found in a few milligrams of dispersed material. In theory, for a fibre about 100 µm long by about 2 µm diameter, this implies an analytical sensitivity (based on one fibre found) in the order of 1 ppm by mass. In practice the analytical sensitivity will be higher as there are a number of matrix-dependent factors that may make it more difficult to detect and identify the asbestos fibres. For example, a sample of 0.005% amosite in a white powder was found by only 13% of laboratories participating in the AIMS scheme. The care and amount of time spent on each sample by the analyst and the use of appropriate sample preparations will also determine the sensitivity for samples containing small amounts of asbestos.

ANALYSIS

Procedure

A2.7 This appendix describes analytical techniques and procedures that have been shown to give reliable detection and identification of asbestos in a variety of bulk materials. Alternative methods can be used if equivalence in terms of detection and identification can be demonstrated. **All procedures should be designed to avoid cross-contamination between samples**. Identification of the asbestos fibres should be based on the following analytical sequence (see also Figure A2.1). Detailed procedures for the main types of asbestos-containing bulk materials are given in paragraphs A2.17–A2.55):

(i) The sample is removed from its packaging and a preliminary visual examination of the whole of the bulk sample is made to assess the sample and material type. If samples are non-homogeneous and consist of layers of different material or are samples of debris made up of several different materials: each layer or material will need to be examined. An assessment of the required sample treatment (if any) will need to be made. (A representative sub-sample may be taken at this stage.)

(ii) A detailed and thorough search under the stereo-microscope is made to classify the fibre types present.

(iii) Sample treatment is undertaken (see Table A2.2) to release or isolate fibres.

(iv) Representative fibres of each suspected asbestos type seen are mounted in appropriate RI liquids on microscope slides.

(v) The different selected fibrous components are either identified using PLM, as one of the six regulated asbestos types, or determined to be non-asbestos.

(vi) If no asbestos is identified by these procedures, additional searches for small asbestos fibres on random sub-samples of a few milligrams are undertaken using PLM (see Figure A2.1 and paragraphs A2.30–A2.31).

Precautions

A2.8 **Handling procedures should be such as to minimise the risk of releasing fibres into the laboratory:**

- Visual and stereo-microscope examinations and sample preparation must be conducted inside a fume cupboard, or in a suitable cabinet.
- Sealed bags or containers of asbestos samples should only be opened inside such a cabinet or fume cupboard. Heavy-duty plastic bags are recommended for temporary containment of waste before final disposal in correctly labelled bags (see paragraph A2.82).
- When ACMs are handled frequently, airborne exposures should be assessed as required by CAR and the results recorded and made available to the analysts. In any case, representative personal air monitoring should be conducted on selected analysts on a periodic basis, in the sample preparation/identification area.

- Emergency and spillage containment procedures must be documented and implemented as required.

Chemicals used in sample preparation are subject to the Control of Substances Hazardous to Health (COSHH) Regulations.[68] They should be fully assessed before use and handled in fume cupboards as appropriate.

Laboratory safety: equipment and design requirements

A2.9 Equipment requirements:

- Fume cabinets must conform to BSEN14175 (2003)[69] and should have a minimum face velocity of 0.5 m/s over the working area.
- Recirculating air cabinets must conform to BS7989[70] and draw air away from the analyst and pass through a high-efficiency filter (a type H12 filter (99.5% efficient at 0.3 µm) or higher).
- A Class H vacuum cleaner is also recommended for emergency clean-up and cleaning up spills inside the cabinet.
- Ergonomic laboratory design allowing easy movement between areas used for sample preparation and analysis is recommended.
- Adjustable seating to allow the analyst to sit with a relaxed and comfortable posture is particularly important. A background shield may be required if other sources of light or activity interfere with the analyst's comfort or concentration. To avoid eye fatigue, the peripheral view beyond the microscope should ideally be distant and without direct sunlight.

Laboratory safety: maintenance and housekeeping

A2.10 CAR requires a written assessment and POW for cleaning, checking and maintaining the fume and recirculation cabinets and vacuum cleaners. There must be documented records of the checks being carried out, with the date, signature and comments of the person carrying out the activity. Filters must be changed by a trained competent person following documented procedures (eg controlling the release of asbestos and ensuring that the correct replacement filters are properly fitted). Cabinets should be regularly cleaned (eg horizontal surfaces wiped with a wet disposable cloth or vacuumed with a Class H vacuum cleaner). Any spills should be cleaned up at once. Procedures for disposal of contaminated materials and the capping of any vacuum hoses kept outside the cabinet should be documented and followed. CAR Regulation 13 requires that control equipment such as fume cupboards and recirculating fume cupboards used for asbestos are thoroughly examined and tested by a competent person at suitable intervals with the records kept for five years. The ACOP stipulates that the examination frequency should be six months.

Reagents

A2.11 Liquids of known RI are required to identify the six asbestos minerals. A minimum of five high-dispersion liquids having RI values 1.550, 1.605, 1.640, 1.670 and 1.700 are used commonly. (Note: The manufacturers are now quoting RIs to 4 decimal places.) However, other RI liquids may be required to achieve RI match between fibre and liquid (see also paragraph A2.54). The commercially available RI liquids have a stated shelf life and should not be used past this date, unless their RIs are verified against a standard (eg the HSE asbestos reference samples) or measured directly using calibrated glasses or a refractometer. The verification should be repeated at least every three months. As already outlined in paragraph A2.7, contamination by particles and fibres during use should be avoided; therefore, it is recommended that any RI liquids in frequent use are checked regularly for particulate contamination as part of the quality control programme, and that suitable records of such checks be kept (see also paragraph A2.74). Various reagents will also be required for sample treatment (eg acetic acid, hydrochloric acid, sodium hydroxide, and

acetone or other organic solvents); small amounts of these should be 'decanted' for use into a separate container to reduce the likelihood of fibre contamination of the stock solutions (see also paragraphs A2.20–A2.21).

Sample preparation and analytical equipment

A2.12 Apparatus required for sample preparation will include probes, needlepoint tweezers and fine tungsten needles. Pre-treatment apparatus may include glass beakers, disposable or washable glass Petri dishes or containers, an ultrasonic bath, boiling tubes, vacuum filtration flask, pump and filter holder with appropriate filters (glass fibre and cellulose filters are not recommended because they may introduce fibres into the sample). Pliers, a file, a hammer and a saw may be needed to break samples; sub-samples may be crushed between two microscope slides; or a pestle and mortar may be used to grind samples and release fibres from matrices. Wet samples may be dried using a hot plate, oven, infra-red lamp or by flushing through with acetone. For PLM analysis, glass slides, coverslips, probes and tweezers of appropriate quality are required. A flame is a useful way to assess whether organic fibres and spider's webs are present. For larger non-homogeneous samples (eg soil samples), large plastic or foil trays will be needed for visual inspection of the entire sample.

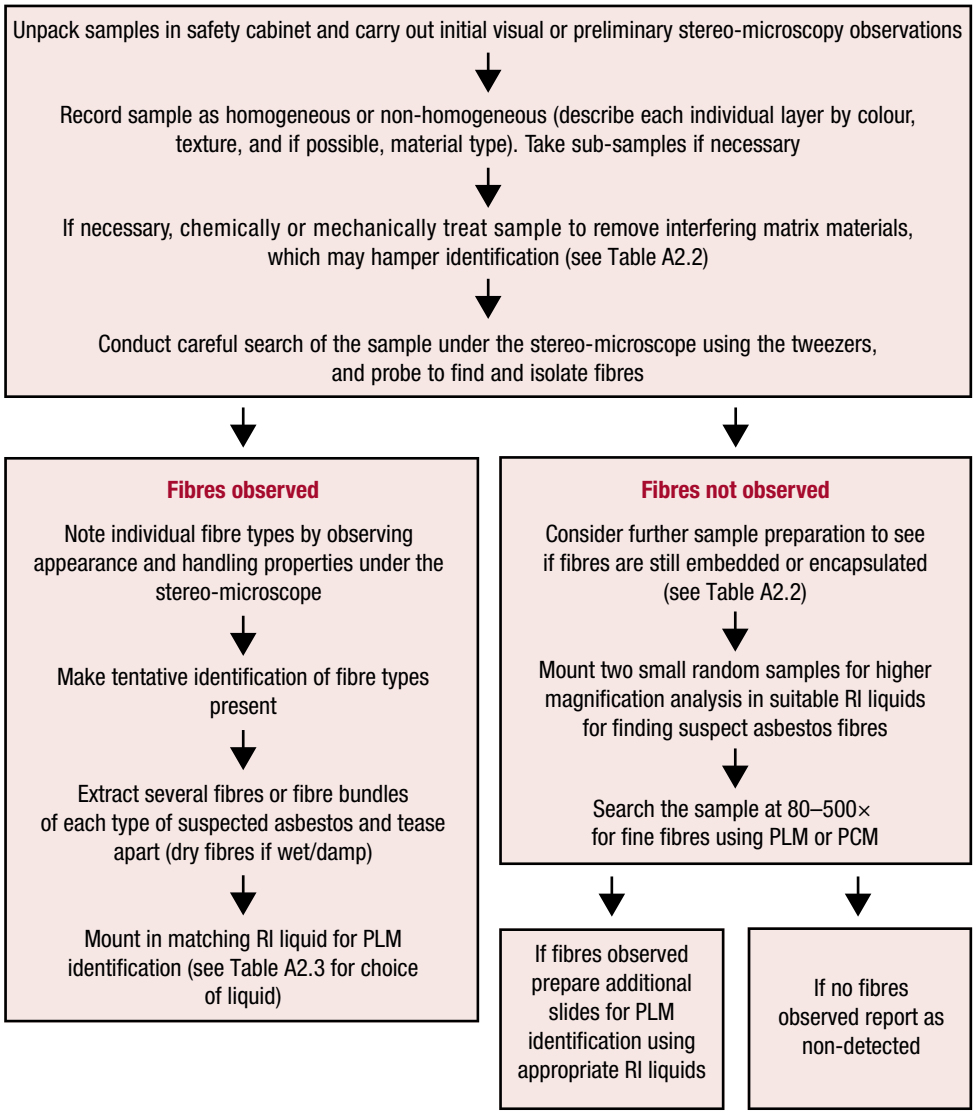

Figure A2.1 Initial examination of samples

Note: Fine chrysotile fibres were commonly used in some commercial products (eg vinyl asbestos floor tiles and decorative/textured coatings). Fine asbestos fibres may also be present in some mineral products and settled dusts. Higher magnifications (eg using 500x or 600x phase contrast microscopy (PCM) optics) may be used to search for fine asbestos fibres. Increased visibility and contrast can be obtained by using liquids with a large RI difference from the fibre (eg for chrysotile use water or a liquid of RI = 1.67).

Microscopes

A2.13 Microscopes should be suitably equipped and set up to carry out the analysis as described in the method. A low-powered stereo-microscope (eg 8–40x magnification) is required for the initial search. A polarised light microscope with Köhler (preferably) or Köhler-type illumination is needed for fibre identification: if the instrument has an in-built light source it must have an independently centrable condenser. Also required are:

- a focusable condenser with numerical aperture (NA) greater than or equal to that of the objective used;
- a condenser iris;
- a polariser;
- a removable analyser;
- a removable first-order red compensator (of retardation approximately 530 nm) with known vibration direction;
- a level rotating and independently centrable stage (or a level rotating stage and centrable objective);
- matched-pair binocular eyepieces of 8x or higher, one focusing (preferably non-rotatable). An eyepiece cross-hair graticule defining the vibration directions of the polariser and the analyser may also be used;
- Bertrand lens or focusing phase telescope;
- objectives of 10x (minimum NA = 0.2) and higher magnification as specified in paragraph A2.15.

Note: In some microscopes, filters may reduce the light intensity and should be removed for satisfactory PLM work.

Use of camera systems for imaging and identifying fibres

A2.14 Camera systems that can be set up as detailed above, and that are shown to achieve a comparable performance with conventional PLM detailed above, can also be used. Camera systems can be linked to computer screens to display images.

Additional equipment for RI assessment

A2.15 One of the following accessories is required to aid the assessment of fibre RIs by producing intense dispersion staining colours (see also paragraphs A2.53–A2.54):

- phase contrast objective (10x magnification or greater), and condenser with matching centrable phase annuli; or
- a dispersion staining objective (10x magnification) with a central stop in its back focal plane, used in conjunction with the condenser iris (which is capable of producing a pin-hole aperture).[71]
  Note: many modern microscopes are supplied with a 1.25 NA condenser as standard but they are not fitted with a condenser iris that closes sufficiently. The microscope supplier should supply either a condenser of lower NA or a better iris for successful dispersion staining.

Reference samples

A2.16 The laboratory should hold reference samples of the six regulated asbestos types listed in paragraph A2.1, and commonly occurring non-asbestos fibres including natural organic fibres (such as cotton and hair), synthetic organic fibres (such as aramid, polyester and rayon), machine-made mineral fibres (for example, mineral wool and glass fibre), and naturally occurring mineral 'fibres' (such as wollastonite and diatom fragments). Asbestos reference samples and slides suitable for polarised light microscope analysis[72] are available from HSE Science and Research Centre, Buxton (see Further information). Other asbestos reference materials may be useful. It is recommended practice for analytical laboratories to establish their own libraries of in-house standards related to their work (see also paragraph A2.57).

DETAILED ANALYTICAL PROCEDURES

Initial visual examination

Figure A2.2 Bulk material being examined under a stereo-microscope

A2.17 The entire sample should be removed from its packaging and visually examined inside the handling cabinet to make an initial assessment of whether there are visible fibres present, the type of material present, and whether the material is homogeneous or non-homogeneous (ie layered). Further examination of insulation samples and many manufactured products under the stereo-microscope will aid the detection of fibres and allow some initial assessment of the number of fibre types present (see Figure A2.2). Certain products such as decorative plasters, vinyl floor tiles, and settled dusts, may contain asbestos fibres that are too fine to be detected in this initial examination, the first two requiring an extensive search. The appearance, colour and texture of the sample, and any fibre types observed, should be recorded. The product type determines what sample treatment is required to help isolate the fibres from the other components. For non-homogeneous samples, each separate layer, part or variant should be described and then analysed individually using the appropriate method of sample preparation for each component. Sample preparation and the analysis of the sample are dependent on the quality of the initial visual examination. An adequate description of the appearance of the sample is important in establishing where, or in which part of the sample matrix, the asbestos material is present. Guidance on procedures for soil samples is given in Appendix 7.

Sample treatment

A2.18 To identify asbestos fibres by PLM it is necessary to isolate them from the sample matrix material and it may be necessary to remove fine particles adhering to the fibres (both of which obscure optical effects and hinder identification). **Table A2.2 outlines the sample preparation treatments and techniques for various types of bulk material. One or more of these should be carried out whenever regulated asbestos types are not found in a material/product type that is**

known to have the potential to contain asbestos. The preparation codes in the table are explained in A2.19 onwards. For some product types, it may be prudent to carry out the sample preparation before the stereo-binocular examination (eg textured decorative coatings). Paragraphs A2.19–A2.25 specify the main effect of the procedure applied. **Routine procedures for sample treatment used in the laboratory should be fully documented. Any deviations from these procedures for particular samples should be recorded. The laboratory must record which sample preparation techniques have been used.**

Table A2.2 Sample preparation for various bulk materials

Type of bulk material	Preparation code	Sample preparation
Loose fibre, sprayed coatings and textiles	-	Usually not required
Lagging	A and B	Breaking and treat with dilute HCl
Asbestos insulating board (AIB), asbestos cement (AC) and millboard	-	Usually not required
Decorative plaster, textured decorative coatings	A and B	Breaking and acid treat with dilute HCl
Mastics and adhesives	A, C and D	Breaking, solvent treatment and/or combustion
Floor tile	A, and C or D	Breaking and solvent treatment or combustion
Loose soils and aggregates	E	See Appendix 7
Vermiculite	D, F, G	Combustion/heating and/or acid/alkali digestion/ sedimentation[73]
Wet samples	-	May be searched while damp but dry fibres are required for PLM analysis

A2.19 **Breaking of resistant materials (A)**: Non-friable samples and painted or coated samples will need to be broken (with tools if necessary). The newly fractured edges should be inspected under the stereo-microscope for the presence of protruding fibres, which are carefully removed and mounted in an appropriate RI liquid for PLM analysis. Some hard pieces may require crushing or grinding to help examine them properly. Surfaces and edges may be abraded to help release fibres.

A2.20 **Acid treatment (B)**: Dilute acetic acid (eg 50%) or cold dilute hydrochloric acid (eg 10%) may be used to remove calcium carbonate, calcium sulphate and calcium silicate, which are common binders in insulation and asbestos boards, and which are used as fillers in floor tiles. Such treatment can be performed microscopically or with the naked eye. Sufficient acid should be added in small aliquots for several minutes or until effervescence stops. Fibre release may be aided by stirring, crushing with a suitable tool or by ultrasonic treatment. For macroscopic treatment, the sample is then filtered and repeatedly washed with water. (Residual acid may degrade the fibres and affect the optical properties, and small crystals of salts will form.) The sample may be rinsed with acetone or other volatile solvents to reduce drying time. For microscopic treatment a large coverslip is placed over the preparation and it is examined by PLM for the presence of fibres (not suitable for some objective coatings). If fibres are present they can be extracted, washed, dried (acetone is helpful) and then mounted for examination. Alternatively the host material can be examined in greater depth for the presence of fibres. See also paragraph A2.7.

A2.21 **Solvent treatment (C)**: Organic binders (eg in plastics, bitumen, resin or rubber products) may require prolonged treatment in solvents. For some materials an effective solvent will need to be established by trial and error. RI liquids may soften and dissolve materials such as bituminous mastic and some floor tiles and drops can be used to clean individual fibres before mounting them for PLM (see also paragraph A2.7).

A2.22 **Ashing/combustion treatment (D)**: Some organic binders may be removed by ignition; eg at 400°C in a furnace/oven or using a spirit lamp, but the optical properties of the asbestos fibres may be modified (see paragraph A2.59). Low-temperature ashing in an oxygen plasma asher will also remove organic materials from the surface of materials, making the fibres easier to see. Other suitable alternatives can be used providing it can be demonstrated that it does not affect the optical properties of the asbestos fibres.

A2.23 **Disaggregation treatment (E)**: Some types of samples have many small particles attached to the fibres, making it difficult to view the optical properties. These can be removed by various treatments, either before or after mounting for PLM identification (eg placing in denatured alcohol, or using pressure on the coverslip to separate fine attached particles in the RI liquid).

A2.24 **Sedimentation treatment (F)**: This allows particle size separation to take place and various fractions to be selected for more detailed analysis. Some materials and particles can also be separated by flotation.

A2.25 **Specialised product treatments (G)**: Specialist methods have been developed to treat certain products to make analysis easier. These usually involve a number of preparation stages and these methods are referenced in Table A2.2.

Stereo-microscopy

A2.26 The original samples or portions of sample that have undergone macroscopic sample treatment should be examined using the stereo-microscope. For many asbestos samples a low-power stereo-microscope (10x) is suitable, but for other samples higher magnifications are sometimes necessary to detect and examine fibres. The aim is to detect small fibre bundles, or individual fibres, and tentatively assign fibre types based on their appearance. The sample is placed into a suitable container or onto a suitable surface and a detailed search of the whole sample is undertaken. Needles or tweezers are used to separate the different fibrous components from the matrix. These fibres are then observed under the stereo-microscope and their appearance noted. The care and vigilance with which the sample is examined at this stage are important in detecting asbestos. Representative fibres or fibre bundles can be selected and mounted for PLM.

A2.27 Layered samples should be described by their appearance and each layer noted and examined as a separate entity. Other types of non-homogeneous samples will require detailed visual examination and sample preparation by the methods listed in Table A2.2. All observations should be recorded.

A2.28 Generally asbestos is recognised by the fineness of its fibres (see paragraph A2.41), which are often present in closely packed bundles of fibrils that will divide along their length when pressure is exerted on them with a probe or tweezers. A competent analyst will be familiar with characteristics such as distinctive surface lustre, flexibility and tensile strength, as listed in Table A2.3. Initial tentative identification of the fibres at this stage will be confirmed or refuted by subsequent examination using PLM. The start and finish time of both the stereo-binocular evaluation and identification of fibres by PLM should be recorded.

Table A2.3 Use of physical properties and appearance under the stereo-microscope to determine choice of RI liquid for PLM identification of asbestos fibre type

Physical property/appearance						
Colour	Colourless/white	Colourless/white to grey-brown			Greenish-grey	Deep blue
Texture	Soft with bundles of sinuous fibres	Soft or harsh; may appear as easily visible parallel fibre bundles			Soft or harsh with parallel fibre bundles	
Appearance	Flexible fibres which cling to tweezers	Straight fibres easy to handle			Straight fibres easy to handle	
Lustre	Silky	Vitreous	Vitreous	Vitreous/silky	Vitreous/ green/grey	Metallic (dark and highly reflective)
Tensile strength	High	High	Medium	Low	Low	High
Tenacity	Flexible	Flexible	Flexible	Flexible	Flexible	Flexible
Elasticity	Inelastic	Elastic	Elastic	Elastic	Elastic	Elastic
Tentative asbestos type	Chrysotile	Amosite	Anthophyllite	Tremolite	Actinolite	Crocidolite
RI liquid for test	1.550	1.670	1.605	1.605	1.640	1.700

Preparation of samples for PLM

A2.29 A tentative identification based on the stereo-microscopy evaluation is used to select the most appropriate RI mounting liquid. Fibres should be dry and relatively free from other particulate matter. Representative fibres or fibre bundles are chosen and are placed on a clean microscope slide into a drop of RI liquid, and a clean coverslip is lowered gently onto the slide. The RI of the liquid selected should be close to one of the two observable fibre RIs (see paragraph A2.54 and Table A2.4) for positive identification (eg 1.550 for chrysotile, 1.670 for amosite and 1.700 for crocidolite).

Figure A2.3 RI liquid being placed on a glass slide

A2.30 For bulk samples in which no fibres have been seen using the stereo-microscope, or none of the fibres selected have been identified as asbestos by PLM, tweezers or probes should be used to take random sub-samples after the bulk sample has undergone suitable treatment (if necessary).

The edges of hard products can be scraped to release material. At least two microscope slide preparations should be made with appropriate RI liquids for examination by PLM (see Figures A2.3 and A2.4). Selection of large particles or fibre bundles may cause tilting of the coverslip and should be avoided. It is recommended that a coverslip of at least 20 mm is used for these preparations and that an even distribution of dust is spread across the area defined by the coverslip. Any large agglomerates should be teased apart, or may be ground gently between two microscope slides, to give an even distribution. **It is recommended that 'asbestos not detected' is reported when no asbestos fibres or fibre bundles are found after careful searching of the sample under the stereo-microscope for around 10 minutes and searching a minimum of two extracted preparations mounted in suitable RI liquid at high magnification by PLM/PCM for a further 5 minutes. If during the search of the two 'pinch' samples by PLM only 1 or 2 fibres (or fibre bundles) are seen and identified as asbestos, the term 'trace asbestos identified' may be used. (The terms 'asbestos not detected' and 'trace asbestos' are defined in Box A2.1.)** The analytical method is not quantitative and percentages of asbestos should not be reported.

Box A2.1 Definition of the terms 'asbestos not detected' and 'trace asbestos'

The term 'asbestos not detected' should be reported when no asbestos fibres or fibre bundles are identified after the following analysis:

- careful searching of the sample under the stereo-microscope for around 10 minutes; and
- subsequent searching a minimum of two extracted preparations mounted in suitable RI liquid at high magnification by PLM/PCM for a further 5 minutes.

If during the search of the two 'pinch' samples by PLM only 1 or 2 fibres or fibre bundles are seen and identified as asbestos, the term 'trace asbestos identified' should be used.

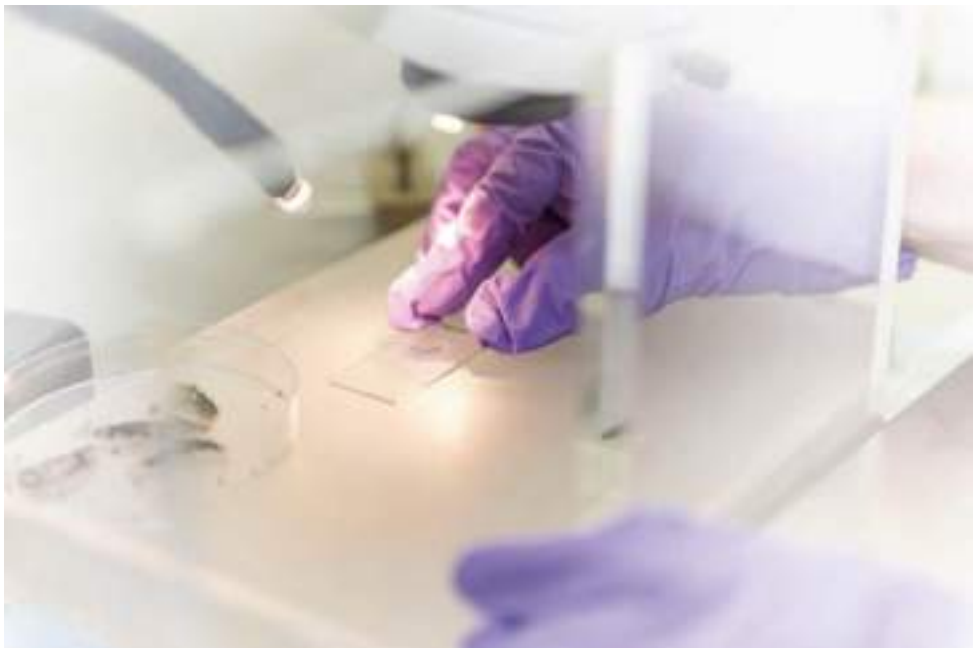

Figure A2.4 A glass slide with RI liquid ready for a fibre to be placed on it

A2.31 An alternative method that may be used for hard granular materials (that may scratch the slide during grinding) is to disperse sub-samples in a few millilitres of liquid by shaking and waiting a few seconds for large particles to settle out, before pipetting one or more drops onto a microscope slide. Once it has dried an appropriate RI liquid can be used to form a mount between the sample deposit and coverslip, taking care not to contaminate the RI liquids (eg place RI liquid on the coverslip before inverting it onto the slide). This gives a good deposit to search for the presence of thin fibres. Alternatively the deposit can be scraped onto a third slide containing a suitable RI fluid. In order to effectively search by PLM for the presence of thin (<1 μm) fibres in slide preparations it is recommended that the sample is mounted in a RI liquid significantly different from the asbestos type suspected, and examined using phase contrast optics to enhance fibre visibility. Although no dispersion staining colours will be seen, the analyst can make a decision as to whether or not asbestiform fibres are present and proceed accordingly. The amount of sample distributed should be such that the appearance and properties of individual fibres are not obscured by other particles. Fine materials can also be separated in other ways (eg lifted from the inside of the plastic sample bag).

Microscope set up for PLM observations

A2.32 Before starting any analysis, the microscope should be adjusted to give Köhler (or Köhler-type) illumination. This requires the analyst to:

- Remove all filters (except polariser) and stops from the light path and open all irises.
- Adjust lamp illumination. For Köhler or Köhler-type illumination, using the substage condenser and iris diaphragm, check that the light source is focused and centred in its housing (follow manufacturer's instructions).
- Adjust the light to a comfortable intensity and focus on a sample that is mounted in an RI material giving good contrast.
- Adjust chair height and position as necessary for comfortable viewing.
- Adjust interocular distance for comfortable viewing. Make sure eyepiece cross-hairs are in focus by using the eyepiece focussing mechanism and if necessary readjust the image focus.
- Centre for stage rotation by adjusting the screws on the stage or objective nosepiece as appropriate to make sure that a spot in the sample placed under the centre of the cross-hairs does not drift when the stage is rotated by 180°.
- Make sure that the image of the field iris is central in the field of view (close the iris and manipulate the condenser centring screws), in the same plane of focus as the specimen (adjust the condenser focus), then opened to the edge of the field of view but no further. The imaging rays are now set.
- To make sure that the illuminating rays are correctly set, inspect the back focal plane by doing one of the following:
  - Insert Bertrand lens.
  - Remove an eyepiece.
  - Insert phase telescope.

  The back focal plane should be fully and evenly illuminated and the substage iris in focus. For Köhler or Köhler-type illumination the lamp filament should be in focus and completely fill the field of view (correct by adjusting the lamp housing).
- Close the substage iris; it should be in focus. Reopen it to the edge of the back focal plane, the correct position for all techniques used in the identification of asbestos except dispersion staining and Becke line.
- Remove Bertrand lens (or phase telescope or replace eyepiece) and view sample image.
- Insert the analyser (in crossed-polars mode) and using a slide of straight fibres known to have complete parallel extinction (amosite works well), make sure that the cross-hair directions coincide with the vibration directions of the polariser and analyser by aligning them with the extinction positions of the fibres.

A2.33 If phase contrast dispersion staining is used the back focal plane of the phase objective should be inspected. The appropriate condenser annulus for the chosen objective (magnification 10x, 20x or 40x) should be inserted and aligned to coincide with the objective phase ring using the appropriate controls on the condenser. Return to image viewing mode to observe the colours. (Note: The condenser annulus should be removed for all other viewing modes.)

A2.34 To set up for dispersion staining using the dispersion staining objective, inspect the back focal plane, dial in the central stop of the objective (which should be in focus in this mode) and close the sub-stage iris just sufficiently to stop the direct rays. The illumination intensity should be increased until it is slightly overrunning (ie slightly into the red area indicated on the voltage supply or at maximum if no such indicator is installed). Return to image viewing mode to observe the colours. (Note: The objective stop should be removed and the sub-stage iris adjusted appropriately for all other viewing modes.)

Observation modes used for asbestos identification

A2.35 Asbestos minerals, like many other minerals, have a crystal lattice structure based on a regular three-dimensional array of silica tetrahedra, with a number of additional cations making up the structure. The exact arrangement of the silica tetrahedra and the type of cations in the structure will change the interactions (optical properties) between the crystal structure and the light rays transmitted through them. To observe the optical properties a number of observation modes are used. These are obtained by inserting various accessories into the light path to create interactions between the light rays and the particles under study. Using a range of accessories a number of different optical properties can be assessed, which, when compared with similar observations on known sources of asbestos, can be used to determine that the fibres are of the same type.

A2.36 A number of optical properties must be assessed to identify a particle as the optical properties viewed will depend on fibre type and particle orientation. However, the nature of asbestos fibres (extreme growth along the c-axis, the presence of many fine fibres in more or less parallel alignment to form fibre bundles, and the frequent occurrence of twinning) means that they will show a more limited range of optical properties as they will have a preferential alignment in the microscope; ie it is not possible to look down the end of the fibre. For all observations a polarised light source must be used (see Figure A2.5).

Figure A2.5 Analyst using a polarised light microscope

Asbestos identification by PLM

A2.37 Identification of a single asbestos fibre or bundle requires the assessment of the following properties (see Table A2.4) in the stated observation modes. In general it will be possible to view all of the optical properties only when fibres are:

- > 1 µm width;
- free of adhering particles and matrix material;
- mounted in high-dispersion liquids with a RI match for a wavelength of light (λ_0) in the visible spectrum.

An assessment of the optical properties in the sequence listed in Table A2.4 would be carried out as follows:

- Under plane-polarised light conditions, morphology, colour and (with stage rotation) pleochroism can be observed.
- The analyser is then inserted (to give crossed polars) and the stage is rotated to observe birefringence and the extinction characteristics.
- With the polars still crossed, a first-order red compensator is inserted and the stage is rotated to determine the sign of elongation.
- The RIs of the fibre are assessed by dispersion staining to see whether or not the values are typical and consistent with published data. This may be achieved by observing the dispersion colours at the interface between the fibre and the RI liquid. The most commonly used techniques require that the analyser and compensator be withdrawn, the illumination be increased, and an objective with a central stop or phase ring in the back focal plane be inserted together with an appropriate condenser stop (paragraph A2.15).

Table A2.4 PLM observation modes for optical properties

Mode	PLM observation mode	Property
1	All modes	Morphology
2	Plane-polarised light (polariser only)	Colour and pleochroism (if present)
3	Polarised light/crossed polars (polariser and analyser)	Birefringence (anisotropic behaviour) Extinction characteristics
4	Crossed polars with first-order red compensator	Sign of elongation
5	Normally using a phase contrast, or dispersion staining objective with polariser only	Refractive index by dispersion staining colours

A2.38 In practice, as the physical appearance in Table A2.3 is used to select the RI liquid in which to mount the suspected asbestos fibre, the examination should start using a mode (eg 3, 4 or 5 – see Table A2.4) that renders the fibres easily visible: fibres mounted in liquids close to the RI match point have low contrast in plane-polarised light mode (polariser only) and are not readily located. The choice of mode to commence the asbestos identification can vary between sample types. For instance, small amounts of asbestos in machine-made mineral fibres (MMMF) are readily detected in modes 3, 4 or 5. If the fibres have been selected without interfering particles or fibres, mode 5 may be an appropriate starting point. Table A2.5 summarises the microscope settings for the various observational modes.

A2.39 The observations made of the morphology and the optical properties of the fibre are recorded. Identification is based on comparing the recorded observations on the fibres selected for analysis (and mounted in the appropriate RI liquid) against the properties of asbestos reference standards (which may be in the form of a table such as Table A2.6). A close match between the optical properties of the sample fibre and the asbestos standard will normally be achieved. Further representative fibres will need to be analysed if the observations are inconclusive, or if more than one type of fibre was found during the stereo or PLM analysis.

A2.40 An example of a suitable analytical sequence is given in Table A2.5. Optical properties of asbestos are summarised in Table A2.6, and more detailed descriptions of the optical properties required to positively identify asbestos minerals follow in paragraphs A2.41–A2.55. Details of the technique by which these properties may be best observed by the analyst are also included. Common problems that arise during identification are discussed in paragraphs A2.56–A2.68. Descriptions of the physics behind the modes of operation, and of the optical properties observed, are beyond the scope of this method and can be found in various standard texts.[74, 75]

Table A2.5 Summary of the microscope settings for the various observational modes

	Polariser	Analyser	First-order red compensator	Condenser iris (adjust viewing back focal plane)	Central stop of DSO or phase contrast annulus
Pleochroism* and morphology	In	Out	Out	Iris leaves just visible	Out
Birefringence and extinction	In	In	Out	Iris leaves just visible	Out
Sign of elongation	In	In	In	Iris leaves just visible	Out
Becke line	In	Out	Out	Almost closed	Out
Dispersion of refractive indices:					
A) Dispersion staining objective (DSO)	In	Out	Out	Closed behind central stop	In
B) Phase contrast	In	Out	Out	Appropriate phase condenser annulus	In
* Pleochroism may also be observed under crossed polars, see paragraph A2.42.					

Morphology

A2.41 The amphibole minerals which form asbestos also occur in non-fibrous forms.[76] These non-fibrous forms are listed in Table A2.1 and can occur as, or be broken into, fragments that are long and thin, some of which may satisfy the regulatory definition for fibre counting. However, the asbestos regulations apply only to the asbestos forms of the minerals (studies indicate that the biological potencies of such non- or less-fibrous forms are lower than for the asbestos forms of the minerals).[77] While this observation can be largely explained by the number of fibres released, the assessment of mineral fibre potency due to their different habits and composition is not fully resolved.[78] A detailed description for asbestiform morphology has been developed[79–81] which can help distinguish between populations of asbestos fibres and non-asbestiform fragments (see also paragraphs A2.57–A2.58):

'Under a light microscope, the asbestiform habit is generally recognised by the following characteristics:

- *a range of aspect ratios ranging from 20:1 to 100:1 or higher for fibres longer than 5 µm;*
- *capability of splitting into very thin fibrils;*
- *two or more of the following:*
  - *parallel fibres occurring in bundles*
  - *fibre bundles displaying frayed ends*
  - *fibres in the form of thin needles*
  - *matted masses of individual fibres, and/or*
  - *fibres showing curvature.'*

Note: Many minerals are a mix of both fibrous and non-fibrous components. This should be borne in mind when interpreting the above criteria: eg for Korean tremolite much of the non-fibrous component has an aspect ratio <20:1. The discrimination methods in Appendix 4 can help to further investigate and describe the habit of the fibres. Application of more detailed procedures may be required in some circumstances.[82]

Table A2.6 Properties used to identify asbestos by PLM

Asbestos type		Chrysotile	Amosite	Anthophyllite	Tremolite	Actinolite	Crocidolite
RI liquid		1.550	1.670	1.605	1.605	1.640	1.700
Property/ morphology	Fibrous	Fibrous	Fibrous	Fibrous	Fibrous	Fibrous	Fibrous
Pleochroism	Fibre parallel	None	None	None	None	Green	Blue
	Fibre perpendicular	None	None	None	None	Grey	Grey
Birefringence		Low	Moderate	Moderate	Moderate	Moderate	Low/ anomalous
Extinction		Complete, or undulose with curved fibres; parallel	Complete; parallel	Complete; parallel	Complete; parallel or small angle	Complete; parallel or small angle	Complete; parallel
Sign of elongation		Usually positive (length slow)	Positive (length slow)	Positive (length slow)	Positive (length slow)	Positive (length slow)	Usually negative (length fast)
Dispersion staining objective colours	Fibre parallel	Purple	Yellow	Yellow–orange	Yellow	Red/ orange/ yellow	Blue
	Fibre perpendicular	Blue	Purple–red	Blue–red	Blue	Blue–purple	Blue
Phase contrast objective colours	**Fibre parallel**						
	Fibre colour	Pale blue	Grey	Dark grey	Dark grey	Dark grey	Blue
	Halo colour	Orange	Yellow	Orange	Yellow	Yellow	Red–brown
	Fibre perpendicular						
	Fibre colour	Pale blue	Blue	Blue	Blue	Blue	Blue
	Halo colour	Orange	Orange	Orange–yellow	Orange	Orange	Red–brown
RI ranges	N^{α}	1.537–1.554*	1.670–1.675*	1.596–1.654+	1.599–1.620+	1.619–1.658+	1.680–1692*
	n^{γ}	1.545–1.557*	1.683–1.694*	1.625–1.667+	1.622–1.641+	1.641–1.677+	1.683–1.700*

Notes

1 ‘Fibre parallel’ or ‘fibre perpendicular’ describes orientation with respect to the polariser.
2 Dispersion colours relate to HSE reference standards.
3 Slight compositional variations will give rise to differences in the dispersion staining colours observed.
4 RI ranges marked * were obtained from commercial asbestos fibre;[83] RI ranges marked + were obtained from non-commercial fibres.[84]

Colour and pleochroism

A2.42 All coloured substances selectively absorb some wavelengths of visible light. Anisotropy can cause this selective absorption to differ with vibration direction. The result is a change in colour with orientation (pleochroism). Colour and pleochroism are observed using plane-polarised light. Pleochroism is defined as a change in colour of a crystalline material with orientation relative to the

vibration plane of polarised light. Crocidolite has a natural strong absorption, which gives a dark blue colour when parallel to the polariser, changing to pale blue-grey when perpendicular as the fibre is rotated. Actinolite often has a natural green colour and changes from green parallel to the polariser to pale green, grey or yellow when perpendicular to the polariser. These properties are important in the identification of crocidolite and actinolite (see Table A2.3). The other four asbestos types show little colour contrast under plane-polarised light, unless they have been altered by heat (see paragraph A2.59).

A2.43 Alternatively, pleochroism can be detected by orienting a fibre at 45° between crossed polars. The colour of the fibre is observed as the polariser (or analyser) is rotated a small angle each way from the crossed polar position. Any difference in colour between the two directions of rotation indicates that the fibre is pleochroic. This is a very sensitive test of pleochroism, and is convenient to perform when observing birefringence and angle of extinction using crossed polars.

Birefringence

A2.44 The numerical difference between the highest and lowest RIs of a mineral is known as the birefringence. For routine asbestos fibre analysis, the exact birefringence is not usually used but an assessment is made as to whether it is low, moderate, high or extreme. When the vibration directions of an anisotropic crystal (more than one RI) and the polariser are not aligned, the polarised light ray entering the crystal is split into two components, vibrating in two mutually perpendicular directions coincident with the crystal's vibration directions. Hence one component travels through the crystal faster than the other component. The effect is greatest when the crystal is aligned such that the α (fastest ray) and γ (slowest ray) vibration directions are angled at 45° to the polariser vibration direction. The resultant difference between these two components passing through the crystal, called retardation, is dependent on both the crystal's thickness and its birefringence.

A2.45 The above effects are readily seen when the analyser is inserted (crossed polars). A component of the light from each of the crystal's vibration directions passes through the analyser. The crystal's birefringence and thickness (retardation) cause a phase difference between these rays and recombination of them results in interference (either constructive or destructive). Since the microscope is illuminated by white light and the RI varies with wavelength, interference colours are produced as the wavelengths of white light interfere either constructively or destructively. The relationship between interference colours, birefringence and thickness are shown in the Michel-Lévy (colour interference) chart. (Note: typical examples of these charts can be viewed online.) The interference colours are ranked as 'orders' with the red colours forming the order boundary. First-order colours have retardation from zero (black) to 530 nm (red). The optical effects caused by birefringence are typically observed in crossed polar mode. Insertion of the analyser, which only transmits light with a vibration direction at 90° to that of the polariser (crossed polars), results in absorption of all direct light and hence a black background.

A2.46 Between crossed polars, an asbestos fibre aligned at 45° to the polariser vibration direction should be clearly visible against the dark background. Chrysotile has low birefringence and gives a grey colour for thin fibres and a white colour or, sometimes, higher first- (or even second-) order colours for thick fibres. Crocidolite has a low birefringence and strong pleochroism which results in anomalous interference colours from grey to pale blue or sometimes brown. The other amphibole asbestos fibres have moderate birefringence, giving white interference colours for thin fibres and higher first- or second-order colours for thick fibres. Fibres with a variable thickness (eg with wedge-shaped cross-sections) will show parallel bands of colour along their lengths, representing lower interference colours for the progressively thinner sections.

A2.47 Amorphous or isotropic materials (eg MMMFs) do not polarise the light transmitted through them, so they will appear to be barely visible when viewed with crossed polars as the microscope stage is rotated. They can, however, be seen more easily with the first-order red compensator in place, or with slightly uncrossed polars. Most particles and fibres are birefringent (eg synthetic and natural organic fibres, gypsum, hair, leather, wool and many others) and birefringence alone is not

proof of the presence of asbestos. Interference colours and extinction can be used to distinguish asbestos from some synthetic organic fibres and natural fibres (eg paper, cellulose and cotton) that often show non-uniform interference along the fibre and incomplete extinction.

Angle of extinction

A2.48 As the microscope stage is rotated through 360° an asbestos fibre viewed between crossed polars will disappear from view or 'extinguish' at four positions each 90° apart, while at 45° between each extinction position, interference colours should be visible. Extinction is caused when a vibration direction within the fibre/particle is in alignment with the vibration direction of the illuminating rays. All light is transmitted without alteration as a single refractive index and hence, when it meets the analyser, it is stopped. Most fibre types, including asbestos, have vibration directions parallel and perpendicular to their length and generally show complete extinction when they are aligned parallel to the vibration planes of either the polariser or the analyser (known as complete parallel extinction). For curly fibres of chrysotile, the extinction is undulose as it appears to pass 'wave-like' along the fibre. Chrysotile, amosite, crocidolite and anthophyllite show complete parallel extinction. Actinolite and tremolite asbestos usually exhibit parallel extinction, but can show very nearly parallel (less than 5° from parallel) extinction because the vibration directions are slightly off the fibre axis (see also paragraphs A2.57–A2.58). However, some sources of asbestos (eg Korean tremolite and tremolite impurities in other minerals) can have a mix of morphologies from asbestiform-acicular crystals to elongated mineral fragments. A wider range of extinction angles will be seen for fibres and some fibre bundles in such mixtures.

Sign of elongation

A2.49 The sign of elongation describes the relationship between fibre shape and vibration direction and the effect this has on the optical properties. The two available vibration orientations are parallel to the long axis and perpendicular to it. If the high RI vibration plane (slow ray) is parallel to the long axis, then the fibre is described as positive (or length slow); if the low RI vibration plane (fast ray) is parallel to the long axis, the fibre is described as negative (or length fast). The sign of elongation is determined using crossed polars and a compensator whose vibration directions are at 45° to the principal planes of polarisation in the microscope. The 'slow' and/or 'fast' vibration directions are indicated on the compensator (the exact notation depends on the manufacturer and age of the compensator). It should only be used for fibres showing grey or white interference colours in crossed polar mode when they are also aligned at 45° to the polarisation planes in the microscope. When the 'slow' directions of the fibre and the first-order red plate coincide, the overall retardation is added and the interference colour increases to second-order blue. When the slow directions are at right angles to each other, the retardation of the fibre subtracts from that of the plate and the interference colour reduces to first-order yellow. The first-order red plate causes confusing results for fibres with interference colours above first-order white.

For a compensator with the slow direction towards the NE–SW, the colours observed are as shown in Table A2.7.

Table A2.7 Colours observed for a compensator with the slow direction NE–SW

Positive (length slow) fibre	Blue–green with fibre NE–SW Orange–yellow with fibre NW–SE
Negative (length fast) fibre	Orange–yellow with fibre NE–SW Blue–green with fibre NW–SE

Crocidolite is the only one of the six regulated asbestos types that generally has negative sign of elongation (length fast). However, exposure to heat of about 300°C or higher may change the sign of elongation of crocidolite to positive (length slow); see paragraph A2.59.

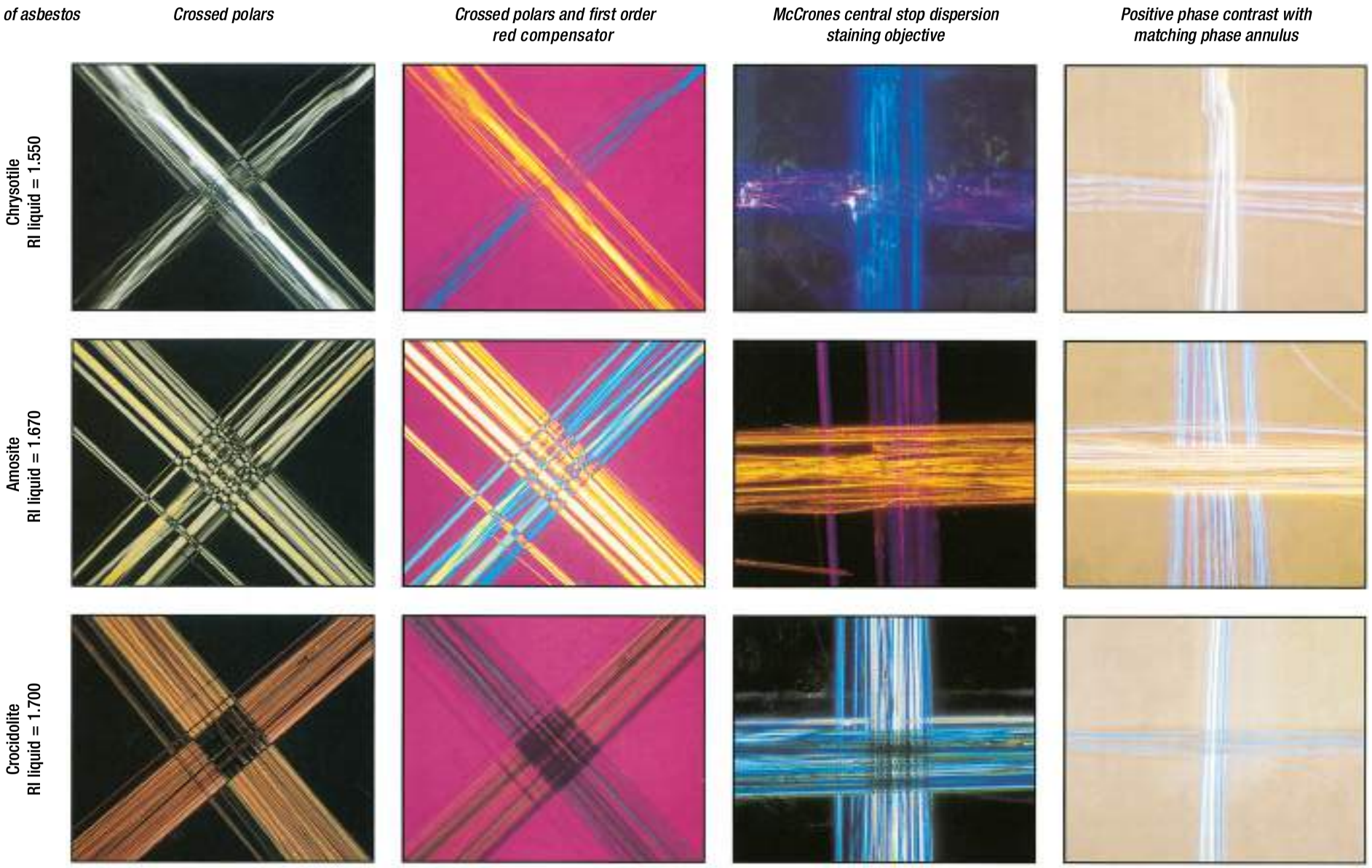

For a compensator with the slow direction in the NE-SW orientation and polariser aligned in the E-W direction. All phase contrast dispersion mounts used the Series B (1.556, 1.680, 1.692, 1.640, 1.604, 1.604) RI liquids, and McCrones central stop dispersion staining mounts used the Series E high dispersion RI liquids (as given). Approximate magnification is ×100.

Figure A2.6 HSE asbestos reference samples viewed by polarised light microscopy

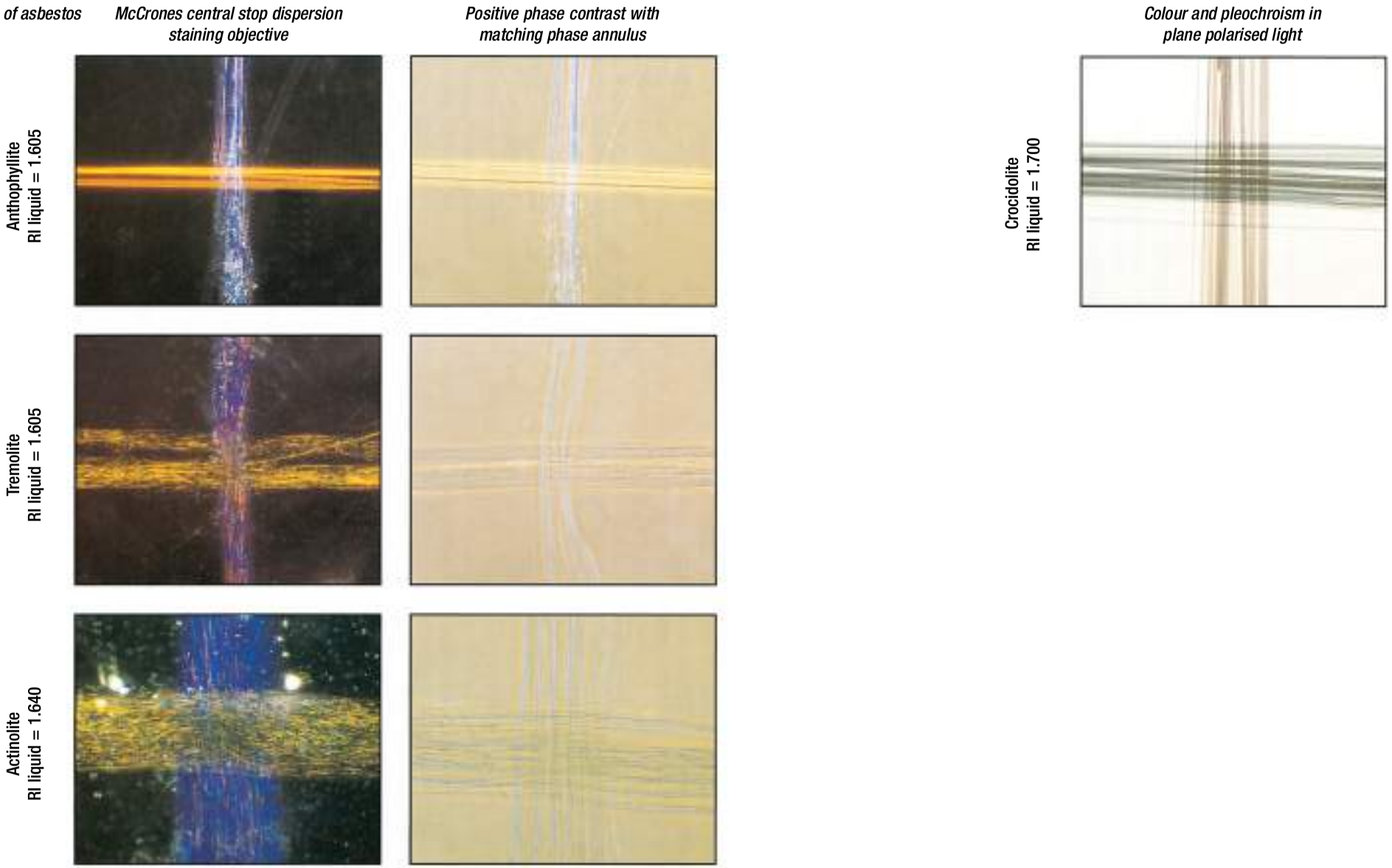

For a compensator with the slow direction in the NE-SW orientation and polariser aligned in the E-W direction. All phase contrast dispersion mounts used the Series B (1.556, 1.680, 1.692, 1.640, 1.604, 1.604) RI liquids, and McCrones central stop dispersion staining mounts used the Series E high dispersion RI liquids (as given). Approximate magnification is ×100.
Note: crossed polars and crossed polars with a first order compensator plate appearances for anthophyllite, tremolite and actinolite are the same as for amosite.

Figure A2.6 (continued) HSE asbestos reference samples viewed by polarised light microscopy

Refractive index

A2.50 When light passes through any material it is slowed down. The refractive index (RI) of any material is the ratio of the speed of light in a vacuum to the speed of light in that substance and is generally quoted for the sodium D line (n_D) at 589 nm. RIs of transparent materials are generally measured by microscopy by immersing them in liquids of known refractive index. Most crystalline materials have more than one refractive index because the atoms are packed in a different array along the three crystal axes. The RIs of an asbestos fibre are assessed by mounting the clean separated fibre in a liquid of known RI and orienting it either parallel or perpendicular to the polariser vibration direction. One or more observations are conducted to determine whether the RI of the fibre is higher than, lower than or equal to that of the mounting liquid. The types of observation that can be made are:

a) Relief;
b) Becke line;
c) Dispersion staining colours.

For RI evaluation during identification of asbestos, (c) alone is sufficient if a phase contrast or a dispersion-staining objective is used and the fibre is mounted in a liquid with a RI match for a wavelength of light in the visible spectrum so that dispersion staining colours can be observed. When dealing with an atypical sample, (a) and (b) are simple observations which can be used to choose a suitable mounting liquid such that the RIs of fibre and liquid are close to match point.

Relief

A2.51 The mismatch in refractive index between particles and their mount renders them visible by a combination of reflection and refraction of light at the particle edges. The greater the mismatch, the greater the contrast. This intrinsic contrast is termed relief: high relief denotes high contrast and, conversely, low relief denotes low contrast. If the correct RI liquid has been chosen, little relief should be present and it may be difficult to find the asbestos fibre using plane-polarised light. If high relief is observed, there is little point in trying to observe dispersion staining colours and a different RI liquid mount should be prepared. Contrast can be increased by partially closing the condenser iris, but this sacrifices resolution.

Becke line

A2.52 When significant relief is observed, it is important to know whether a higher or lower RI liquid should be tried. Partially closing the condenser iris to give an axial beam will result in reflection and refraction of the light at the particle edge owing to the differences in RI between liquid and particle. These effects form a bright halo at the edge of the particle. To determine whether the particle has a higher or lower RI than the mounting liquid, the movement of the halo is observed as the focus is lowered or raised. In most microscopes the stage is moved when the focus is adjusted. When the stage is lowered (the equivalent of a raised focus) the halo or Becke line moves towards the medium with the higher RI. For fine fibres the effect is best observed using a high numerical aperture (magnification) objective. When the RIs of the liquid and particles are close, dispersion causes two Becke lines to appear; the red line moves into the particle and the blue line moves into the liquid or vice versa.

Dispersion staining

A2.53 Dispersion is a term used to describe the variation in RI with the wavelength of light. Differences in dispersion between particles and the high dispersion liquids used in the analysis of asbestos mean that even though the RIs match at one wavelength of the visible spectrum they will be quite different at others. This leads to colour effects when fibres are observed in matching RI liquids

using white light. It is easiest to observe small bright particles against a black background; hence the dispersion-staining objective employs a central stop in the back focal plane of the objective used with an axial beam of light produced by the condenser iris. This configuration stops the direct rays and dispersion staining colours are formed by the refracted rays (those not at RI match point with the fibre and liquid). Another method that produces a coloured image on a grey background is to use a phase contrast objective with a corresponding phase annulus in the condenser when about 70% of the direct rays are stopped. In both cases, the colours observed depend on the precise wavelength at which RIs for the liquids and fibres match. Dispersion staining is a particularly valuable technique for routine identification of asbestos in commercially produced products.

Table A2.8 Dispersion staining objective – central stop (saturated colours on a black background)

Fibre RI >>	Liquid RI	White
Fibre RI >	Liquid RI	Pale yellow
Fibre RI =>	Liquid RI	Purple–red/orange/yellow
Fibre RI =	Liquid RI	Purple/blue
Fibre RI <=	Liquid RI	Blue/blue–green
Fibre RI <	Liquid RI	Pale blue
Fibre RI <<	Liquid RI	White

When the RI match between particle and mount is just outside the visible spectrum the central stop colours are paler. When the particle and mount are a long way from RI match point, the particle appears white. Hence a pale blue colour indicates that the RI of the mounting liquid is too high whereas a pale yellow colour indicates that a higher RI mount should be used to achieve a match in the visible spectrum.

Table A2.9 Positive phase contrast (desaturated colours on a grey background)

Fibre RI >	Liquid RI	Thin fibres darker than background; thick fibres can show light in centre of fibre with thin dark outline
Fibre RI =	Liquid RI	Blue colour to fibre, with a diffuse red or orange halo
Fibre RI <	Liquid RI	Thin fibres lighter than background; thick fibres can show dark shading in centre of fibre

Where there is a mismatch of RI, phase contrast is particularly helpful in deciding whether the fibres are lower or higher RI than the liquid they have been mounted in.

A2.54 Different dispersion staining colours will be observed when the fibre is oriented parallel or perpendicular to the polariser, arising from the different RIs of asbestos fibres. Recording of the predominant colours is used to characterise the fibre RIs. In theory, the identification of commonly encountered asbestos fibres can be performed using five high-dispersion liquids having the RI values 1.550 for chrysotile, 1.605 for tremolite and anthophyllite, 1.640 for actinolite, 1.670 for amosite and 1.700 for crocidolite. In practice, because of variations in the fibre composition according to source, a wider range of fibre RIs can be found and a more extensive range of RI liquid may be required to achieve a match for one wavelength between fibre and liquid. Examples of the dispersion staining colours obtained with the HSE reference materials are listed in Table A2.6 and illustrated in Figure A2.3.

A2.55 The dispersion staining colour difference along and across the fibre also gives an approximate measure of the birefringence of the fibre. A fibre with low birefringence will give colours that are close to each other, eg using phase contrast dispersion staining; crocidolite in RI liquid 1.700 generally gives a blue fibre colour with red–brown halo in both directions. A fibre with moderate birefringence will give strong colours in each direction but they will not be close (eg amosite in RI liquid 1.670 typically gives a grey fibre colour with a bright yellow halo when the fibre is parallel to the direction of the polariser and a blue fibre colour with an orange–red halo when perpendicular to the polariser. Particles with high birefringence may give a strong colour in one

direction but in the other direction the colour will be desaturated and at the opposite end of the complementary range, showing that there is no RI match in the visible spectrum for that orientation. Little if any dispersion staining is observed for particles with extreme birefringence.

COMMON PROBLEMS

Positive identification of certain amphibole fibres

A2.56 To avoid misidentification of the amphibole type, it is important that all the required observations are made and compared with observations made for reference asbestos fibres, exhibiting properties such as those listed in Table A2.6. The RI ranges in Table A2.6 have been taken from two literature sources: those quoted for chrysotile, amosite and crocidolite respectively were obtained from commercial asbestos fibres; those quoted for anthophyllite, tremolite and actinolite were obtained from non-commercial asbestos fibres that may occur in some ore bodies. However, it should be noted that the optical properties alone may not be sufficient to distinguish between tremolite and actinolite from some sources (because these minerals are members of a 'solid solution series' for which there is continuously varying composition, giving a continuous range of RIs),[85] or between tremolite and anthophyllite (because they have similar birefringence and RI ranges). When such distinctions are critical, additional methods of analysis (eg analytical electron microscopy, X-ray diffraction or infra-red spectroscopy) should be used (see also paragraph A2.4). If only PLM is available, examination of acicular non-asbestos forms of the associated minerals (which may be present in the sample) can be helpful in making the distinctions.

Differentiation between asbestos and elongated mineral fragments

A2.57 Research has identified that a number of common rocks and minerals can, on occasions, contain small amounts of amphibole asbestos and/or chrysotile as a natural impurity. The potential sources include dolomite, basalt, soapstone (talc), marble and vermiculite. This natural impurity occurs in some regions due to the specific chemical composition and geological processes and changes. Amphibole minerals are often coarse with prismatic or lath-like crystals, which tend to break along two sets (at 60° to each other) of parallel planes of weakness within the atomic lattice known as cleavage planes. As a result the dust produced tends to contain a number of elongated fragments having sizes within the definition of a regulated fibre (longer than 5 µm, diameter less than 3 µm and aspect ratio >3:1, as used for fibre counting). These elongated fragments have other properties which can help distinguish them from asbestos.[86,87] In some circumstances the analyst may need to identify elongated particles and decide whether they are mineral fragments or asbestos fibres. All of the non-asbestos amphibole minerals, including non-fibrous forms of anthophyllite, tremolite and actinolite, have three vibration planes and three different RIs. Anthophyllite is orthorhombic and hence always exhibits parallel extinction. The other relevant amphiboles are monoclinic and (depending on crystal orientation) this can result in extinction occurring when the elongated crystal axis forms an angle up to 20° with the vibration directions of the crossed polars. If a crystal exhibiting maximum extinction angle is reoriented about its long axis it will show parallel extinction. When there is a complex mixture of amphibole mineral morphologies present (ie asbestiform and non-asbestiform), it may be necessary to undertake more detailed analysis using scanning electron microscopy (SEM) with energy dispersive X-ray analysis (EDX) or transmission electron microscopy (TEM) with EDX and selected area electron diffraction (SAED).

A2.58 Asbestos fibres are mineralogically anomalous in effectively showing only two RIs and consistent parallel extinction. This is because even the very thin fibres that can be viewed in the polarised light microscope consist of bundles of polyfilamentous crystals with each crystallite randomly oriented along the length of the bundle. The difference between the extinction characteristics, together with the fibrous morphology described in paragraph A2.41, is used as the basis of the polarised light microscopy discrimination between asbestos and amphibole mineral fragments.

Heated asbestos

A2.59 When asbestos is progressively heated the fibres become more brittle and undergo changes in their optical properties, with increases in both RIs and changes in the birefringence.[88–90] Therefore, care should be taken if sample preparation involves heating the asbestos-containing material or the samples are from fire damage or likely to have been used for high-temperature insulation or exposed to high temperatures. For crocidolite, the changes with heating are: the sign of elongation reverses and the colour changes through grey then yellow to orange–brown; pleochroism is suppressed at the grey colouration stage, but reappears as dark brown to lighter yellow–brown on further heating. For amosite the sign of elongation remains positive (length slow) but the colour changes through yellow to a dark brown, and pleochroism develops with the same colour changes as heated crocidolite. In both cases the RIs are greater than 1.700. So heat-degraded crocidolite and amosite are effectively indistinguishable by light microscopy after exposure to temperatures known to be above about 500°C. The RIs of chrysotile increase after significant exposure to temperatures of about 600°C or greater: the birefringence decreases and the fibres become pale yellow-brown. Prolonged exposure to high temperatures changes the sign of elongation to negative (length fast), when the fibre has an RI above 1.640. The alteration of asbestos by heat is dependent upon both the duration and the temperature of exposure. Prolonged exposure to high temperatures can result in complete degradation (eg of furnace linings) but with judicious sampling unaffected fibres can often be detected in peripheral locations or in debris, which became detached during installation. If the asbestos is being thermally and/or chemically altered to allow recycling, the sampling and analysis of this material requires the use of robust protocols to confirm the absence of asbestos.

Fibres with morphological and/or optical properties similar to asbestos

A2.60 Most of the fibres discussed in the following paragraphs occur infrequently in samples presented for analysis. However, analysts need to be aware of their existence and distinguishing characteristics in PLM. Five types of fibre, which can resemble chrysotile, are discussed in paragraphs A2.61–A2.65. Some mineral fibres that superficially resemble amphiboles are discussed in paragraphs A2.66–A2.68.

A2.61 Polyethylene is the most important of the interfering fibres because it is used as an asbestos substitute. Shredded polyethylene resembles chrysotile. In RI liquid 1.550 the fibres show dispersion stain colours, which appear typical of chrysotile (although more experienced analysts will observe desaturation of the blue colour across the fibres because of the low RI in this direction). The birefringence is higher than that of chrysotile and fibres are therefore more visible than chrysotile in plane polarised light. The fibres are thin and generally show first-order bright white interference colours instead of the milky grey–white characteristic of chrysotile. If polyethylene is suspected, the melting of fibres on a hot plate or in a flame will distinguish them from chrysotile.

A2.62 Leather swarf fibres have low birefringence and similar dispersion staining colours to chrysotile.[91] At low magnification (100×) they appear to have similar morphology to chrysotile, but they usually have clearly visible uniform fibrils, whereas chrysotile fibrils are too small to be seen by PLM, hence the non-uniformity of the fibre bundles. Leather swarf mounted in RI liquid 1.550 is readily visible in plane-polarised light because it is not completely transparent, whereas chrysotile similarly mounted is barely visible. Additionally, the thicker portions of leather appear opaque and can also have a uniform colour from any dye that may be present. In most instances the differences between chrysotile and leather swarf can be detected during examination with the low-power stereo-microscope. If leather is suspected as being present, the sample may be ashed at 400°C to remove it, and then re-examined for identification of asbestos. Care should be taken not to let the sample temperature rise above 600°C (see paragraph A2.59).

A2.63 Macerated aramid fibres may appear to have morphology similar to chrysotile but are recognisable by their extreme birefringence showing high-order white interference colours (the first-order red plate readily shows that these are not low-order white interference colours). When mounted in RI liquid 1.640 they will show highly variable relief as the stage is rotated and an apparent change in thickness, because the lowest RI (across the fibre) is close to 1.64, while the higher RI (along the fibre) is of the order 2.4.

A2.64 Spiders' webs, and natural organic fibres such as paper and feathers, have RIs close to those of chrysotile and show similar interference colours between crossed polars. In a clean sample, their morphology will distinguish them from chrysotile. However, in a sample containing a lot of particulates, sometimes only a small portion of fibre can be observed due to obscuration by the particles and this can lead to misidentification. Again, these fibres can be removed by ashing the sample or exposing individual fibres to a flame (but refer to paragraph A2.59 for changes to asbestos that may occur on heating).

A2.65 Talc fibres are thin ribbons, which may be recognised by characteristic morphological twists and kinked, bent forms. They have a higher RI than chrysotile parallel to the fibre length (in the range 1.589–1.600, giving a dispersion staining colour pale yellow in RI liquid 1.550). The other two RIs of talc are in the ranges 1.539–1.550 and 1.589–1.600 and are observed perpendicular to the fibre, at different orientations as the fibre is 'rolled' (with a dispersion staining objective, blue and pale yellow in RI liquid 1.550).

A2.66 Fibrous brucite (nemalite) normally consists of straight white to pale brown fibres but lacks the tensile strength of asbestos, is brittle and is soluble in acid. It generally appears to have low birefringence because of lattice deformation and can have either a positive or negative sign of elongation (both may be apparent in a fibre bundle). Both impurities within the lattice and heat can affect the apparent birefringence and the sign of elongation. It is distinguished from asbestos by its RIs, which are in the range 1.560 to 1.590 parallel to the fibre and 1.580 to 1.600 perpendicular (giving colours of yellow to pale yellow in RI liquid 1.550, strong but variable colours in RI liquid 1.558 and pale blue in RI liquid 1.605).

A2.67 Fibrous wollastonite has also been used as an asbestos substitute and has an acicular morphology. It is very brittle, white in appearance and slowly soluble in acid. It has RIs that overlap with tremolite, actinolite and anthophyllite, although it has lower birefringence and always displays an extinction angle, albeit small in some orientations and hence difficult to measure. The RI almost parallel to the elongated dimension is in the range 1.628–1.650. The other two RIs are in the ranges 1.626–1.640 and 1.631–1.653, and are observed across the short dimensions. The most distinctive feature is that the RI along the elongated dimension is intermediate between the other two RIs. Since the particle is lath-shaped, it will generally lie on its largest face and appear length slow. However, gentle pressure on the coverslip with a needle can be used to roll the particles so that it appears to alternate between length fast and length slow.

A2.68 Diatomaceous earth may show acicular fragments with the appearance of tiny fibres. However, the low RI of 1.42 means that they will never dispersion stain in the standard liquids for analysis of asbestos: the Becke line shows their RI to be considerably below 1.550 and the characteristic morphology is recognised at magnifications around 500x.

Identification of other sample components

A2.69 A laboratory conducting routine analysis selectively removes fibres for examination and ignores the majority of the non-asbestos materials. The composition of many asbestos products is relatively uniform during manufacture and a wider knowledge of materials identification can be helpful in recognising many common products or formulations (see HSG264, Appendix 2).

Recording observations

A2.70 For each sample analysed the analyst must record against a unique identifier, which is traceable to or the same as the sample number provided:

- whether the sample is homogeneous, layered or contains a mixture of components (Note: If layered the analysis of each layer will need to be recorded separately, as will different components of mixed samples);
- a description of the material type;
- any pertinent result of the stereo-microscopy examination;
- details of any sample preparation carried out;
- the results of any higher-magnification search for fine fibres;
- the optical properties observed for each fibre bundle analysed by PLM;
- the type/s of asbestos identified;
- whether non-asbestos fibres are present.

The observations must be recorded during the analysis and dated and signed by the nominated analyst. Examples of worksheets to record the observations are given in Figures A2.7 and A2.8. Other observations outside the scope of the method, such as the approximate amount of asbestos present, may be recorded to help identify the type of ACM.

Reporting results

A2.71 All test reports must meet the requirements of ISO 17025 and include the following information:

- the name or letterhead of the organisation carrying out the work;
- the full postal address of the organisation and other electronic contacts;
- the UKAS accreditation symbol and number (and any appropriate disclaimer);
- the printed name/s of the person/s who carried out the work;
- the printed name and signature of the person who authorised the release of the report (this may be the same person who carried out the work);
- the date the report was authorised for release;
- a suitable report identifier or number;
- a cross-reference to the sampling report number (if supplied);
- a clear notification of the laboratory's policy for sample and record/report retention;
- the method of analysis used; and
- for each sample:
  - whether asbestos was not detected or detected at trace levels;
  - the types of asbestos detected/identified;
  - the corresponding site sample number (if different);
  - where the asbestos was present if the sample had layers or other homogeneities.

A2.72 The analytical method is not quantitative and percentages of asbestos should not be reported. Guidance on the percentage of asbestos used in various products is available in HSG264.

Record and sample retention

A2.73 All records, communications and reports pertaining to the analysis should be archived in a retrievable manner for a minimum of five years from the date of issue of the final report. The samples analysed should be suitably packaged and retained in a retrievable, secure manner for a minimum of six months to allow for their use in the intra-laboratory quality assurance and to allow for checks on any discrepancies raised.

ASBESTOS BULK IDENTIFICATION SHEET (PLM dispersion staining) For analyses carried out in accordance with HSG248						
Worksheet number			**Sample number**			
Nominated analyst						
Sample labelling/packaging						
Material type: ✓ appropriate box			**Sample preparation: ✓ appropriate box**			
Lagging			Acid washing			
Textile			Alkali treatment			
Debris			Solvent treatment			
Board			Water washing			
Cement			Crushing			
Textured coating			Ultrasonic			
Tile			Other (describe)			
Unidentified/other						
Visual/stereo-zoom description					**Start time**	**Finish time**
PLM microscope number: *1 *2 *3 (delete as appropriate)						
PLM examination: ✓ appropriate box		**Fibres found**		**No fibres found**		**PLM Start time**
Number of RI liquid used						
Morphology	Straight					
	Curly					
	Other (specify)					
Sign of elongation	Length slow					
	Length fast					
Extinction	Parallel					
	Oblique					
Birefringence	Strong					
	Medium					
	Weak					

Pleochroism	No colour change					
	Blue to grey					
	Other colour					
PCM/polariser: dispersion/fibre parallel						
PCM/polariser: dispersion/fibre perpendicular						
Asbestos fibre type:						
						PLM Finish time
Asbestos type/quantity: **✓ appropriate box**		**Present**		**Trace**		
Chrysotile						
Amosite						
Crocidolite						
Asbestos anthophyllite						
Asbestos tremolite						
Asbestos actinolite						
Other specify (non-UKAS test)						
Further comments						
Signature of analyst				**Date analysed**		

Figure A2.7 Example of an analyst worksheet: PCM dispersion staining

ASBESTOS BULK IDENTIFICATION SHEET (dispersion staining method) For analyses carried out in accordance with HSG248	
Worksheet number	**Sample number**
Nominated analyst	
Sample labelling/packaging	

Material type: ✓ appropriate box		**Sample preparation: ✓ appropriate box**	
Lagging		Acid washing	
Textile		Alkali treatment	
Debris		Solvent treatment	
Board		Water washing	
Cement		Crushing	
Textured coating		Ultrasonic	
Tile		Other (describe):	
Unidentified/other			

Visual/stereo-zoom description:

PLM microscope number: *1 *2 *3 (delete as appropriate)

PLM examination: ✓ appropriate box		**Fibres found**		**No fibres found**	
Slide		1	2	3	4
Morphology	Straight				
	Curly				
	Other (specify)				
Sign of elongation	Length slow				
	Length fast				
Extinction	Parallel				
	Oblique				
Birefringence	Strong				
	Medium				
	Weak				
Pleochroism	No colour change				
	Blue to grey				

	Other colour					
RI liquid used and dispersion stain colours: blue, yellow, gold, magenta, purple, red, orange	1.550	NS				
		EW				
	1.605	NS				
		EW				
	1.640	NS				
		EW				
	1.670	NS				
		EW				
	1.700	NS				
		EW				
Asbestos fibre type						

Asbestos type/quantity: ✓ appropriate box	**Present**	**Trace**
Chrysotile		
Amosite		
Crocidolite		
Asbestos anthophyllite		
Asbestos tremolite		
Asbestos actinolite		
Other specify (non-UKAS test)		

Further comments	
Signature of analyst	**Date analysed**

Figure A2.8 Example of an analyst worksheet: dispersion staining method

Quality assurance and quality control

A2.74 A routine quality assurance (QA) programme to assess the quality of the results produced by the PLM laboratory must be developed and implemented (the programme applies to bulk and soil samples). The purpose of a QA programme is to make sure that the sampling, analysis, recording and reporting of the results all meet acceptable standards. A QA programme will usually have a written protocol to describe how each stage of the procedure is conducted and will define the types and frequency of quality control (QC) measurements and checks that are required. **For routine analyses a minimum overall QC check of 5% of re-analyses on new samples should be maintained (ie the samples analysed up to the maximum number of 20 and 40 described in Table A2.10), with each analyst doing at least two QC samples per working month. The 20% of samples analysed in excess of the requirements described in Table A2.10 are in addition to the 5%.** Many of the required procedures are covered in the UKAS document for asbestos sampling and identification LAB 30.

A2.75 Standards should be set to measure whether or not analytical performance is adequate. Laboratories are required to participate and maintain satisfactory performance in a suitable proficiency scheme such as the AIMS scheme (see paragraph 2.7). UKAS requires accredited laboratories to maintain an intra-laboratory performance-testing programme. For consistency, it is recommended that the AIMS scoring scheme is used for both inter- and intra-laboratory performance testing.

A2.76 The laboratory's internal QC scheme should incorporate the use of bulk 'secondary reference' materials and routine samples to reflect the laboratory's accredited scope. The scheme shall incorporate all six regulated asbestos types at a variety of concentrations.

A2.77 The performance of the analyst will be affected if large numbers of bulk samples are analysed daily. The time needed to analyse a sample will vary with the sample type. Often to report that no asbestos was detected in a sample will take longer than to positively identify the asbestos types present in an ACM. If the total number of samples analysed in a 24-hour period exceeds the numbers given in Table A2.10 additional quality checks must be carried out. At least 20% of the excess samples should be re-analysed, usually by a different analyst. Note that sample preparation work does not contribute to the points total.

A2.78 An absolute maximum of 60 samples or 70 points per 24-hour period per individual analyst is set – this points total should include any routine or additional QC samples. Points are allocated as 1 point per sample for those ACMs listed in category A and 2 points per sample for those ACMs (and non-detected samples) listed in category B in Table A2.10. Table A2.11 sets outs in practice examples of the different number combinations of category A and category B samples that can be analysed along with QC samples to reach the absolute points numbers allowed for individual analysts.

A2.79 Microscopes and ancillary equipment must be maintained in good order and alignment checks should be conducted before analysis.

A2.80 Training and experience is of fundamental importance to both sampling and analysis. Microscopic determination of asbestos requires the analyst to make repeated assessments of a number of physical properties and maintain consistent diligence in the search for fibres. Many of the procedures rely on the quality of judgement of the analyst as well as correct use and alignment of the microscope and detailed recording of the properties tested. Analysts should therefore be thoroughly familiar with the appearance and characteristics of asbestos when it is viewed by a stereo-microscope and the appropriate types of sample preparation. They will be able to use the various modes of operation of the polarised light microscope to identify the six regulated types of asbestos. Reference fibre standards have been prepared on behalf of HSE for this requirement. Contact HSE for further information. In addition, samples chosen for the training programme should typify the range of materials analysed by the laboratory. Until analysts are fully trained an experienced analyst should check all their analyses. An adequate laboratory QA programme will contain detailed descriptions of the training programme, together with the training records of each analyst. The minimum requirement is that an analyst must be able to identify representative (well-defined) fibres of the six regulated asbestos types.

Table A2.10 Maximum numbers of samples of each type that can be analysed in a 24-hour period by a single analyst before implementing additional quality checks

Type of ACM	Maximum number of samples per 24 hours for an analyst before additional QC applies
Category A	40
Asbestos cement (AC) Asbestos insulating board (AIB) Floor tiles (thermoplastic) Bituminous products (eg roofing felt, damp-proof courses, mastics, glues and thermoplastic floor tiles) Laggings (preformed/friable) Sprayed and loose-fill asbestos Textiles and gaskets	
Category B	20
Hard-set lagging Decorative plaster/textured coatings/paints Vinyl floor tiles Soils containing asbestos Asbestos impurities in mineral products Samples with no asbestos detected	

Notes

1 To calculate analyses of various types of ACM: 1 vinyl floor tile analysis = 2 AC analyses. Therefore a combined total of 10 floor tile analyses plus 20 AC analyses can be carried out, before increasing the quality control re-analysis to 20%.

2 **An absolute maximum of 60 samples or 70 points has been set**. Points are allocated as 1 point per sample for those ACMs listed in Category A and 2 points per sample for those materials listed in Category B above (see examples of sample number combinations (including QC samples) in Table A2.11). Note that sample preparation work does not contribute to the points total.

3 Analysis of samples for QC purposes should be included in the maximum permitted numbers described above.

4 Samples where no asbestos is detected usually take longer to analyse than those where asbestos is detected. These samples are therefore placed in the same category as the more difficult samples listed as type B above.

A2.81 Colour or other vision defects need not disqualify a prospective analyst, provided that the individual is able to properly assess the optical characteristics described in this method, can distinguish between the different colours used in the identification, and can achieve a satisfactory standard of performance in a quality assurance scheme. An HSE Medical Series Guidance Note MS7 on colour vision[92] is available, which includes a list of colour vision tests.

Table A2.11 Examples of different number combinations of Category A and Category B samples that can be analysed along with necessary quality control samples to reach the absolute points numbers allowed for individuals (other sample number combinations should be worked out accordingly).

The system operates as follows:

- 1 point for Category A samples; 2 points for Category B samples;
- The maximum number of samples allowed before additional QC applies is 40 for Category A and 20 for Category B samples respectively;
- The additional QC requires that 20% of the excess samples should be re-analysed (preferably by a different analyst).

Number of samples analysed: Category A	Number of QC samples requiring analysis (5%): Category A	Points: Category A samples	Number of analyses possible for Category B samples	Number of QC samples requiring analysis (5%): Category B	Points: Category B samples	Total number of samples (maximum 60)	Total points: Categories A and B and QC (maximum 70)
5	1	6	29*	2	62	37	68
10	1	11	27*	2	56	40	70
15	1	16	25*	2	54	43	70
20	1	21	22*	2	48	45	69
25	2	27	20	1	42	48	69
30	2	32	17	1	36	50	68

Number of samples analysed: Category B	Number of QC samples requiring analysis (5%): Category B	Points: Category B samples	Number of analyses possible for Category A samples	Number of QC samples requiring analysis (5%): Category A	Points: Category A samples	Total number of samples (maximum 60)	Total points: Categories A and B and QC (maximum 70)
5	1	12	54*	3	57	60	69
10	1	22	44*	3	47	58	69
15	1	32	36	2	37	53	70
20	1	42	26	2	28	49	70
25*	2	54	15	1	16	43	70
30*	2	64	5	1	6	38	70

* Additional QC will be required on sample numbers above 20 and 40 for Category B and A samples respectively.

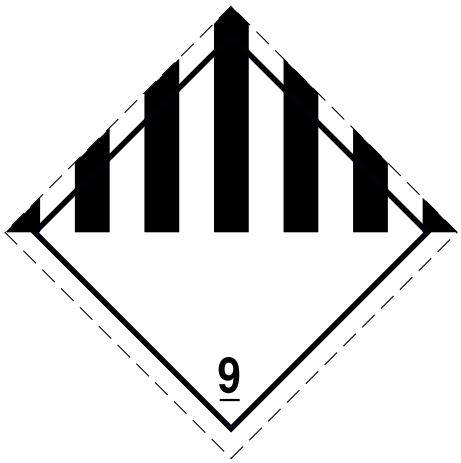

Figure A2.9 CDG 2009 Hazard placard

Sample packaging and transport

A2.82 Bulk samples of asbestos materials taken on site will usually have to be transported to the laboratory for analysis. Asbestos samples are subject to labelling and packaging requirements in accordance with Schedule 2 of CAR and the Carriage of Dangerous Goods and Use of Transportable Pressure Equipment Regulations 2009 (CDG).[93] Asbestos items should be enclosed in 'sealed containers' which should bear the appropriate warning label, ie the hazard placard where CDG applies (see Figure A2.9) and the asbestos warning label (see Figure A2.10) where Schedule 2 applies. CDG also requires all forms of

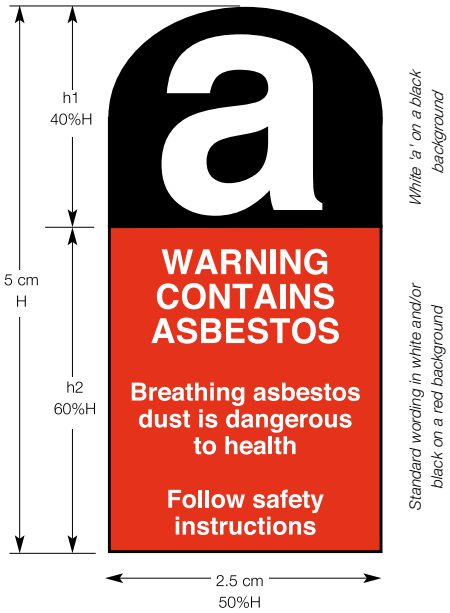

Figure A2.10 Asbestos label

asbestos to be contained in UN-approved packaging unless certain exemption conditions are met on bonded or packaged items (Special Exemption 168) or on 'limited quantities'.

A2.83 Asbestos samples are likely to qualify for an exemption from the CDG packaging requirements under the limited quantities exemptions or, in specific cases, under the bonded materials exemption. In practice, asbestos samples should be double-bagged (with the bags individually sealed) and then placed in an allowed outer packaging which bears the asbestos warning label (see Figure A2.10).

Asbestos waste

A2.84 CAR2012 Regulation 24 places requirements on asbestos waste regarding storage, distribution and labelling of asbestos waste. Guidance on packaging, transporting and labelling waste is set out in the ACOP L143 paragraphs 526–536. Waste should be labelled in accordance with the CDG 2009 or Schedule 2 (where CDG 2009 does not apply). The packaging should bear the appropriate warning label (shown in Figures A2.9 and A2.10).

A2.85 In GB, all waste asbestos, including waste containing asbestos, is 'Hazardous Waste' (England and Wales) or 'Special Waste (Scotland)' when it contains 0.1% w/w or more asbestos **or** a piece of asbestos large enough to be visible to the naked eye. The mixing of asbestos waste with other waste is prohibited, and always results in a hazardous/special waste (regardless of the resultant concentration). The Hazardous Waste Regulations[94] (England and Wales) or Special Waste Regulations[95] (Scotland) apply.

A2.86 Asbestos samples are not hazardous or special waste until they have been analysed and/or are to be discarded without analysis. Asbestos samples therefore can be collected and transported by the analyst without the need for a registered waste carrier until the samples are ready for disposal.

A2.87 All movements of hazardous waste must be consigned in accordance with the requirements of the CDG 2009. A consignment note is required for all waste over 10 kg and all waste, irrespective of amount, must be transported by a registered waste carrier. More details of the requirements are available from the Environment Agency (EA), the Scottish Environment Protection Agency (SEPA) or the Welsh equivalent Natural Resources Wales. The agencies can be contacted via their websites (see Further information).

APPENDIX 2: ANNEX 1

Glossary of terms that appear in Appendix 2 (definitions are preferred terms from the RMS Dictionary of Light Microscopy)

Term	Definition
Achromat	A microscope objective in which chromatic aberration is minimised for two wavelengths (one less than about 500 nm, and the other greater than about 600 nm), and spherical aberration and other aperture-dependent effects are minimised for another wavelength (usually about 550 nm).
Analyser	A polar used after the object (usually between the objective and the primary image plane) to determine optical effects produced by the object on the light, polarised or otherwise, with which it is illuminated.
Becke line	A bright line (due to refraction and/or diffraction) formed in the image at the boundary between media of different optical path lengths. It moves in the direction of the longer optical path when the distance between the objective and the object is increased. (Note: this phenomenon is used to recognise relative differences in RI of two adjacent media, eg a particle and the surrounding medium; when the RIs are matched the Becke line disappears.)
Bertrand lens	An intermediate lens which transfers an image of the back focal plane of the objective into the primary image plane; used for conoscopic observation in polarised light microscopy and for adjustment of the microscope illumination system, especially with phase contrast microscopy.
Birefringence	The qualitative expression of the maximum difference in RI due to double refraction (symbol *n*).
Compensator	A retardation plate (sometimes of variable optical path length difference) used to measure the optical path length differences within an object.
Condenser	A part of the illumination system of the microscope which consists of one or more lenses (or mirrors) and their mounts, usually containing a diaphragm, and is designed to collect, control and concentrate radiation.
Crossed polars	The condition in which the vibration directions of polars (polariser and analyser) are mutually perpendicular.

Dispersion-staining microscopy	The microscopy of transparent objects that are in a mounting medium, the RI of which matches that of the object for a certain wavelength, but which has a distinctly higher dispersive power than the object. Under these conditions both the object and the mounting medium appear coloured near their interfaces. The colour with which the object appears is distinctly different from that with which the mountant appears. The colours and their differences depend on the wavelength at which the RIs of the object and medium match and the kind of microscopy used; dispersion staining may be used in bright-field microscopy, the colour being concentrated in the Becke line, in darkground microscopy or in phase-contrast microscopy.
Eyepiece (or ocular)	A lens system that is responsible for the angular magnification of the final virtual image formed by it from the primary image. This image is converted into a real image by the observer's eye or other converging lens system.
First-order red	Red, first-order (sensitive tint): the characteristic reddish violet interference colour at approximately 530 nm retardation.
Focal plane	(1) A surface connecting all the points at which bundles of parallel rays entering an ideal converging lens cross on the other side of the lens, and thus containing a focal point; (2) a surface at right angles to the optical axis of a lens (or mirror) in which the image of an object lying at infinity is formed: it is one of the cardinal planes.
Focusing eyepiece	An eyepiece with a mechanism for focusing an (interchangeable) graticule or diaphragm mounted within it and coinciding with the primary image.
Iris	A diaphragm bounded by multiple leaves, usually metal, arranged so as to provide an opening of variable size which is adjustable by means of a control.
Interference colours	A mixed colour resulting from extinction or partial extinction caused by interference of one or several parts of a spectrum.
Köhler illumination	A method of illuminating objects in which an image of the source is projected by a collector into the plane of the aperture diaphragm in the front focal plane of the condenser. This latter, in turn, projects an image of an illuminated field diaphragm at the opening of the collector into the object plane.
Numerical aperture	A number (often symbolised by the letters NA) originally defined by Abbé for objectives and condenser. It is given by the expression '$n \times \sin u$', where 'n' is the RI of the medium between the lens and the object and 'u' is half the angular aperture of the lens.
Objective	The first part of the imaging system, consisting of a lens, its mount, and any associated parts. It forms a primary image of the object.

Phase	Relative position in a cyclical or wave motion; it is expressed as an angle, one cycle or wavelength corresponding to 2p radians or to 360°.
Pleochroism	The property of an optically anisotropic medium by which it exhibits different brightness and/or colour in different directions of light propagation, or in different vibration directions, on account of variation in selective spectral absorption of transmitted light.
Polarised light	Light in which there is only one vibration direction.
Polariser	A polar placed in the light path before the object.
Power	The ability of an optical system to produce a magnified image under specified working conditions (eg the optical fitting dimensions). The magnifying power is expressed as the lateral or angular magnification of the image under consideration.
Refractive index	The ratio of the speed of light (more exactly, the phase velocity) in a vacuum to that in a given medium (symbolised by the letter *n* or *n*').
Retardation	The slower propagation of a wave front in a medium of high RI as compared with that in a medium of low RI.
Stage (microscope)	The platform, at right angles to the optical axis of the microscope, which carries the object. It is often fitted with mechanical movements (as in a mechanical stage) to allow easy positioning of the object in the 'x' and 'y' axis and movement along, and rotation about, the 'z' axis.
Stereo-microscope	A binocular microscope in which the object is observed by each eye from a slightly different angle. Disparate image points will be imaged on corresponding points of the retina and thus cause stereoscopic perception.

APPENDIX 3
Water absorption test: Method to differentiate between asbestos insulating boards and asbestos cement sheets

Definitions and nomenclature

A3.1 Asbestos cement (AC) is defined by CAR as a material, 'which is predominantly a mixture of cement and chrysotile and which when in a dry state, absorbs less than 30% water by weight'. Because AC is waterproof it has been used in a wide range of products including profiled roofing sheets and sidings, flat sheets, gutters, drainpipes, pressure pipes and flues. AC typically contains around 10–15% asbestos. The vast majority of AC products contain only chrysotile, although crocidolite and/or amosite may also have been added in some older products (eg underground pressure pipes). Work on or with AC products will normally meet the conditions for Regulation 3(2) and does not require a licence.

A3.2 Asbestos insulating board (AIB) typically contains 15–25% amosite, often with a small amount of chrysotile, in a calcium silicate matrix (some older boards may contain up to 40% asbestos and also contain crocidolite). AIB is readily broken and can give significant fibre release. Asbestos millboards may contain 37–97% asbestos with a matrix of clay and starch. Millboards have a low density and are easily broken. Both AIB and millboards have lower density than typical AC products and will generally absorb more water (≥30%) than AC products. Both AIB and millboard were produced as flat sheets (or blocks) and neither were profiled or shaped. Most work with both is licensable work.

A3.3 Whenever visual identification is inconclusive, and a decision is being made as to whether work on the ACM will be licensable or not, analysis should be carried out to establish the asbestos type(s) present using the method described in Appendix 2 of this document. If, after identification of the asbestos types present, there is still doubt about whether a material is an AC product, a water absorption test should be carried out.

Principle

A3.4 A representative sample of the material to be tested is dried and the weight determined. After weighing, the sample is immersed in water for at least 15 minutes and until there are no more visible signs of bubbles being formed. Excess water is removed from the sample and it is reweighed. The percentage water absorbed is calculated using the dry weight and wet weight of the sample.

Scope and limitations

A3.5 This appendix describes the recommended method to determine the weight percentage of water absorbed by proprietary **flat** asbestos boards and sheets of particular densities. The method is suitable for use on high-density AC products and medium-density insulating boards. Asbestos-containing board materials can be classified as:

- AIB if their weight increase from water absorption is 30% or greater; or
- AC if their weight increase from water absorption is less than 30%.

This method is not suitable for use with low-density boards, lagging or friable materials or profiled sheets (invariably these are AC). This method should be used with the method for the identification of asbestos in bulk materials described in Appendix 2.

Note: Very high-density compressed AIB/asbestos wallboards may still fall within the AC classification using the water absorption method. To overcome these limitations **any flat board which contains predominantly amosite asbestos should be considered to be a licensed asbestos material**. Similarly, any flat board that disintegrates during the water absorption test should be treated as a licensed asbestos material.

Analysis procedure

A3.6 This appendix describes the recommended analytical method that has been shown to give reliable and reproducible results. Alternative methods can be used if equivalence in terms of accuracy and precision can be demonstrated. The classification of flat asbestos-containing board materials should be based on the following sequence (see also Figure A3.4 and the detailed analytical procedure given in paragraph A3.12):

- Dry the board material and determine the dry weight by gravimetric analysis.
- Immerse sample in water until fully soaked.
- Determine wet weight by gravimetric analysis.
- Calculate % water absorption and classify the material accordingly.

Precautions

A3.7 Handling procedures must minimise the risk of releasing fibres into the laboratory. All ACMs should be handled inside a fume cupboard, or in a suitable cabinet, which complies with BS EN 14175 (2003).[99] Sealed bags or containers of asbestos samples should only be opened inside such a cabinet or fume cupboard. Heavy-duty plastic bags are recommended for temporary containment of waste before final disposal in correctly labelled bags (see paragraphs A2.82–A2.87). When ACMs are handled frequently, airborne exposures should be assessed as required by CAR and the results recorded and made available to the analysts. Irrespective of para (2) (a) and (b) of regulation 19 (likelihood of excursions towards the control limit etc), it is recommended that representative personal air monitoring be conducted periodically on selected analysts in the sample preparation/identification area. Written emergency and spillage containment procedures must be available and be ready to be applied.

Laboratory requirements

A3.8 Fume cupboards must comply with the requirements in paragraph A2.9.

Sample preparation and equipment

A3.9 Apparatus required for sample preparation will include glass beakers, disposable containers and sealable bags. Smooth-jawed pliers may also be needed to break the sample into a more manageable size for analysis.

Balance

Figure A3.1 Water absorption sample being weighed

A3.10 A calibrated laboratory balance capable of weighing samples to the nearest 0.01 g is required (see Figure A3.1). Calibration check weights should be available to cover the range of wet and dry board samples analysed. The balance should preferably be located in the fume cupboard (or very close if not) to minimise the possibility of asbestos fibre release during sample weighing.

Reference samples

A3.11 For quality assurance and training purposes, laboratories are encouraged to establish a set of reference asbestos-containing board materials with water absorption percentages above and below 30%.

Detailed analytical procedures

A3.12 This water absorption test should be carried out only on samples in which the presence of asbestos has already been established (eg using the PLM method described in Appendix 2). The test should be carried out on a suitably sized sample (ie a minimum of 3 cm × 3 cm or 9 cm^2) that is free of any adhering material (partially painted samples can be used but may need longer to absorb water). A description of the sample (including the presence of any adhering material) should be recorded. The presence of any non-removable adhering material should be noted in the report.

Figure A3.2 Water absorption sample being dried

All asbestos materials should be handled inside a suitable extraction or recirculating air cabinet fitted with HEPA filters, or sealed in a suitable container.

Remove the sample of ACM from its associated packaging/container and either dry for a minimum of 12 hours at 50–110°C (see Figure A3.2) or until the difference between two consecutive weights made at an interval of not less than 1 hour is less than 1% of the mean of the two measurements (thicker samples will require longer drying time). Both weights should be recorded and the mean weight used in the calculation of percentage absorbed water.

Before weighing, allow sufficient time for the sample to cool and condition. If you are weighing outside the containment cabinet, place the sample inside a labelled preweighed sealable container (eg sealable plastic bag) and weigh to the nearest 0.01 g. Calculate the dry weight of the sample by subtracting the weight of the container.

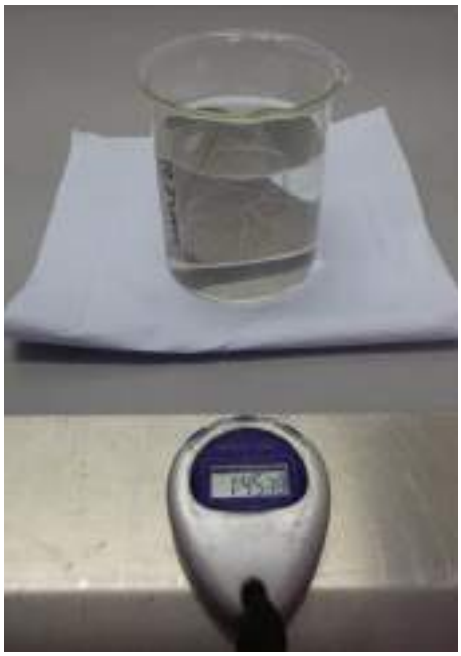

Figure A3.3 Water absorption sample being soaked

After weighing, remove the sample from any container and completely immerse in water (in a suitable container) for at least 15 minutes and until no more visible signs of bubbles forming are observed (see Figure A3.3). The sample immersion time should be recorded (start and finish time).

If at this stage the sample is seen to start to disintegrate during immersion, the test should be terminated and the sample reported as a licensed asbestos material. If the board material is still intact, remove from the water and place it on a paper towel for one minute on each side (upper and lower surfaces) to remove any excess water.

Place the sample in the preweighed sealable container and reweigh to the nearest 0.01 g. The wet weight of the sample can now be calculated by subtracting the weight of the container. The wet weight should be determined at least twice by placing the weighed wet sample back in the water for a minimum of 15 minutes and then reweighing as before. If the first and second weight differ by <5% the highest wet weight is used for the calculation. Samples which increase in weight by >5% should be replaced in the water for a further minimum of 15 minutes and reweighed until successive weights change by <5% (ie until a stable weight of <5% difference is obtained between two successive weighings).

Calculate the percentage of water absorbed by the sample using Equation 5:

$$\frac{(MWW - MDW)}{(MDW)} \times 100 \qquad \text{(Equation 5)}$$

Where MWW is the mean wet weight and MDW is the mean dry weight.

Records and reporting results

A3.13 The records and the report should include sufficient information on the source of the sample and the analysis so the results are traceable and the purpose and outcome of the work are clear.

The analytical record should include the following information:

- the sample number;
- the unique identifier of the balance used;
- the measured value of the calibration weight used to check the balance;
- a description of the sample, including any associated surface material (eg paint);
- the two dry weights of the sample (plus container as appropriate);
- the mean dry weight;
- the start and finish time that the sample was immersed in water;
- the two wet weights of the sample (plus container as appropriate);
- the mean wet weight (used in calculation);
- the percentage of water absorbed by the sample;
- the name of the analyst;
- the date of analysis.

The analytical report should include the following information:

- the name or letter head of the body carrying out the work;
- the full postal address of the body carrying out the work;
- a description of the sample and its source if known;
- the analytical result as percentage water absorbed;
- the 95% confidence interval;
- a statement advising whether the material analysed is or is not a material which (normally) requires a licence to work on;
- the printed name(s) of the person(s) carrying out the work;
- the printed name, job title and signature of the person who authorised the release of the report (this may be the same person who carried out the work);
- the date the report was issued;
- a suitable report identifier or number.

Common problems

A3.14 There are a number of factors that may affect or compromise the analytical result for this test. These include the ones listed in Table A3.1.

Table A3.1 Factors that may affect or compromise results

Time	The amount of time the sample is immersed in water. For example, samples immersed in water for less than 15 minutes will not be fully saturated and the percentage water absorbed will be underestimated. Similarly, some board materials will start to delaminate if immersed for more than 12 hours
Unrepresentative	The analysed portion of the sample should include the entire thickness. Samples that do not include the entire thickness across the majority of the flat surface areas should not be analysed
Coatings	Samples with one or more surfaces coated or covered with an impermeable layer (eg paint, bitumen, PVA glue etc) will take longer to saturate and may not absorb the same amount of water as similar uncoated samples. These samples may be unsuitable for analysis using this method. The use of warm water (50–60°C) and/or surfactants can increase the rate of penetration of water. Scoring the coating before starting the test to allow water to penetrate may also be used to overcome this problem
Damage	Age-weathered board materials which are delaminating will absorb more water than they would in their original state and the results may be an overestimation. It is recommended that delaminated samples are not submitted/accepted for analysis
Organics	The presence of natural organic fibres (eg wood) may lead to increased water absorption
Marginal results	In general, AC products will give results well below 30%. However, some boards may produce a percentage water-absorbed result at or close to 30%. The interpretation of such results may be difficult and further consultation with the surveyor/sampler may be necessary to obtain further representative samples which may give more reliable results (eg uncoated areas of the sample). In situations where the result is at or close to 30%, flat boards which contain predominantly amosite or crocidolite should be considered as licensed asbestos materials

Quality assurance and quality control

A3.15 The classification of flat asbestos-containing board materials should be based on the sequence shown in Figure A3.4.

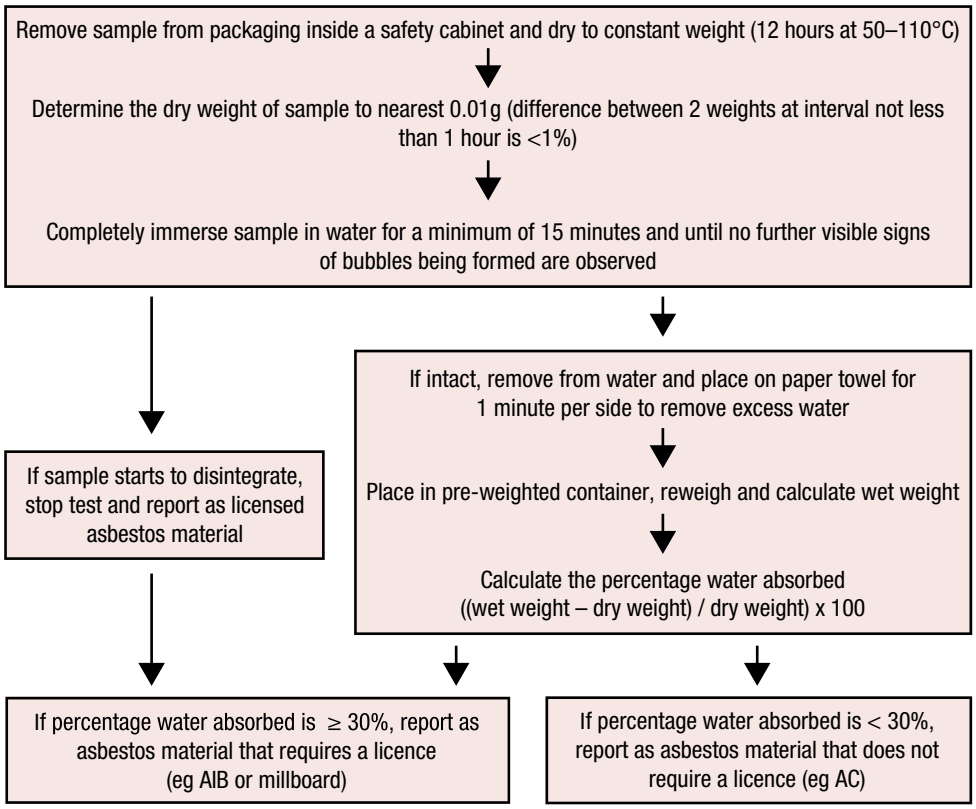

Figure A3.4 Analytical procedure to determine water absorption percentage of asbestos-containing boards and sheets

APPENDIX 4
Fibres in air: Discrimination between fibre types in samples of airborne dust on filters using microscopy

INTRODUCTION

A4.1 The determination of airborne fibre concentrations on filter material by light microscopy is subject to many errors, making the method one of the least accurate analytical techniques in the occupational and environmental fields. The most common analyses are for asbestos and machine-made mineral fibres (MMMF). However, in many sampling situations other fibre types are present on the prepared filter, leading to errors in the evaluation of the sample and interpretation of the result. Fibres have crystallographic and chemical properties, and this appendix provides guidance on using these properties to discriminate between different fibre types in airborne samples. **The methods in this appendix are not covered by UKAS accreditation for air sampling or fibre counting and require separate accreditation by UKAS.**

A4.2 For regulatory purposes CAR defines asbestos as any of the following fibrous materials (or any mixture containing them): chrysotile, amosite, crocidolite, fibrous anthophyllite, fibrous actinolite and fibrous tremolite. MMMF describes various inorganic materials which have been made into fibres: they have names such as 'rock wool', 'slag wool' and 'refractory (or ceramic) MMMF' (sometimes referred to as vitreous fibres (MMVF)), and are subject to an occupational exposure limit under the COSHH Regulations and ACOP.[96] There are two approved methods for determining airborne fibre concentrations: one for asbestos (Appendix 1) and one for MMMF (MDHS 59/2).

A4.3 In some situations it is important to distinguish between regulated (asbestos) and non-asbestos fibre types when fibre evaluations are carried out. For example, this may apply to situations described in Appendix 1. The approach should not generally be applied to clearance testing, since the determination of results above the clearance indicator demonstrates that the enclosure is not clean, even if some of the dust is non-asbestos. Note that in exceptional circumstances it can be applied to clearance testing, such as after asbestos removal operations where non-asbestos dust from work outside the enclosure is perhaps drawn into the enclosure, thereby increasing the 'fibre' concentration (as, for example, gypsum particles from plasterboard, or MMMF fibres from glass fibre insulation). This discrimination method must not be used for the assessment of compliance with the control limit for asbestos or with the occupational exposure limit for MMMF in MDHS 59/2.

A4.4 To assess compliance, airborne fibre concentrations are measured by sampling a known volume of air through a membrane filter and counting the numbers of fibres (>5µm in length, <3µm in width and with an aspect ratio >3:1) in a number of graticule areas using at least 500x phase contrast light microscopy (PCM). However, the use of PCM alone does not give sufficient information to positively discriminate between respirable fibre types. **No single technique is**

capable of identifying all fibres: different techniques must be used for different fibres. However, specific methods are available for most fibre types: for example, analytical transmission electron microscopy (TEM) has the potential to identify all airborne asbestos fibres and ultra-violet (UV) fluorescence microscopy can identify para-aramid fibres. Considerable care must be taken when discriminating between fibre types.

GENERAL METHOD

Principle

A4.5 This method provides guidance on various techniques which may be used to discriminate between fibres. **It should only be used once the routine evaluation by PCM has been completed.** The recommended techniques are:

- polarised light microscopy (PLM);
- UV fluorescence microscopy;
- scanning electron microscopy (SEM), with energy dispersive X-ray analysis (EDXA);
- transmission electron microscopy (TEM), with EDXA and selected area electron diffraction (SAED).

The last two of these techniques rely either on duplicate samples having been taken or on half of the original filter being available (resampling might be adopted but the airborne fibre concentration may not be representative of the initial sample).

Scope

A4.6 When evaluation of fibre concentration by PCM is complete, this method employs various microscope techniques to examine crystallographic and optical properties, and element compositions, which may provide discrimination between certain fibre types. Discriminating decisions should be taken with caution and should not be based on the observation of a single characteristic (such as morphology or UV fluorescence) unless additional information on the environment from which the sample was taken is available. The extent to which this method can be used will depend on the equipment available and on the training of, and care taken by, the analyst.

Strategy

A4.7 Various strategies for fibre discrimination may be considered depending on the purpose of the analysis and the degree of identification required: Table A4.1 lists the most useful methods and notes their applicability to various fibre types. Discrimination can be applied in two ways, either 'positively' when a fibre is identified and then included in the count or 'negatively' when a fibre can be shown to differ from the type being evaluated and therefore is excluded from the count. **Therefore, it is essential first to define the purpose of the fibre count, and second to decide which strategy is appropriate.**

Examples of strategies are:

- positive identification of asbestos fibres present by TEM/EDXA;
- positive identification of para-aramid fibres by UV fluorescence;
- exclusion of MMMF from a PCM/PLM fibre count;
- exclusion of para-aramid from a PCM/UV fibre count.

Each technique (PCM/PLM, SEM/EDXA or TEM/EDX/SAED) has limitations and may give different answers. Therefore it is necessary to understand the techniques and how they can be used. Table A4.1 provides a guide for the main classes of fibres encountered and helps the analyst to select the appropriate method and strategies for different fibre types based on the capabilities and limitations of the methods. Even when populations of fibres exhibit certain characteristics, these may not be shown by all individual fibres: thus, unless further information is available (as noted in paragraph A4.5) **at least two characteristic properties of each fibre should be examined to permit discrimination.**

A4.8 The analyst should choose the most appropriate technique for the strategy selected (see Table A4.1). However, if the types of fibre are not known, a decision hierarchy may be adopted (see Annex 1 to this appendix). The results and their implications should be evaluated after each analysis. In general, the ISO methods for asbestos analysis based on analytical SEM and TEM are used to 'positively' discriminate the asbestos fibres that would be counted by the regulatory PCM analysis in Appendix 1. When using positive discrimination it is important to take account of the analytical limitations and to include fibres that are 'possibly' asbestos. Inflexible acceptance criteria will undercount the asbestos concentration. The ISO methods recognise this and ask for analytical information for each fibre to be documented, so that the count can be reviewed and revised, if necessary, at the end of the analysis when there is greater knowledge of the analytical issues encountered.

Table A4.1 Choice of discrimination method

Primary fibre analysed	Methods			
	PCM/PLM	PCM/UV fluorescence	SEM/EDXA	TEM/EDXA with SAED
	Strategies			
Asbestos	Exclude other fibres >1 µm diameter (limited use if some types of other mineral fibres are present)	Not recommended	Include asbestos fibres >0.2 µm width	Include all fibres and/or fibres >0.2 µm width
MMMF	Include MMMF fibres >1 µm diameter which are isotropic	Not recommended	Include MMMF fibres >0.2 µm diameter, can be useful if source of fibre is known	Include MMMF fibres >0.2 µm diameter, can be useful for fibres from known source
Other mineral fibres	Exclude other fibres >1 µm diameter (cannot always be used to discriminate between different types of mineral fibres such as rutile needles)	Not recommended	Include fibres >0.2 µm diameter, if source is known: can be used to discriminate between some types of mineral fibre	Include all fibres and/or fibres >0.2 µm width; can identify or discriminate fibre types
Synthetic organic fibres	Not recommended, except for a known source which may have a characteristic property	Include certain types of organic fibre from a known source which fluoresce at specific wavelengths	Exclude inorganic fibres >0.2 µm diameter which give an EDX spectrum	Exclude other inorganic fibres of all widths and/or fibres >0.2 µm width, which give an EDX spectrum

Reference material

A4.9 For accurate identification it is necessary that the laboratory has a range of reference materials appropriate to the fibre types being discriminated. Bulk samples should be collected, where possible, as a reference material, preferably at the same site as the air sample. Laboratories can prepare their own sets of reference samples containing fibres of interest.

INITIAL PCM FIBRE COUNT

Sample preparation

A4.10 The membrane filter must be prepared using the relevant procedure (see Appendix 1 or MDHS 59/2). If additional analysis (eg TEM) is anticipated, samples and blank filters should be cut in half with a scalpel using a rolling action with the filter carefully held at the edge. Half of the filter can then be mounted and the other half can be kept for the subsequent investigation.

Fibre counting

A4.11 Equipment and fibre counting procedures must accord with those specified in Appendix 1 or MDHS 59/2. **There should be no discrimination at this stage.**

Result

A4.12 The results of the initial PCM fibre count will determine if there is a need for further analysis. For example, if reassurance sampling is being carried out and the result falls below the clearance indicator, no further action may be deemed necessary. In any case, **PCM alone should not be used to discriminate between asbestos and non-asbestos fibres to produce a fibre measurement.** The strategy used in the discrimination must be stated on the final report.

DISCRIMINATION BY LIGHT MICROSCOPY

PCM/PLM fibre discrimination

A4.13 Discrimination between fibre types is only undertaken during the second analysis of the sample. In order to undertake discrimination in any given graticule area, it is necessary to change between PCM and PLM modes. The additional accessories required are given in Annex 2. A description of the observed appearance of different fibre types on a mounted air sample as seen by PCM is given in Annex 3 and the additional identification that is possible by PLM in Annex 4. An example of a completed count sheet is given in Annex 5.

Fibre discrimination

A4.14 The procedure for a normal PCM count is followed until a countable fibre is found. PLM is used to examine the characteristic properties of the fibre, eg relief, shape, birefringence and pleochroism, as discussed in Annex 4. Examination of the properties will require the following sequence:

- the phase condenser annulus and the light filters are removed;
- crossed polarising filters are introduced;
- the rotating stage locking mechanism is released;
- the first-order red (or other compensator) is introduced if required;
- appropriate observations are made and recorded;
- when observations on the field are complete the microscope is returned to phase contrast mode.

A4.15 It is important that the fibres that generate a PCM count are those which undergo the additional PLM examination. Therefore, care should be taken when the stage is rotated, or when other changes (eg introduction of a high-resolution objective) are made (see Figure A4.1). Analysts should be aware that the discrimination of fibres <1 µm diameter may not be possible using 40x, 0.65NA objectives. In these circumstances discrimination may be possible only by using additional equipment with higher resolution objectives. The characteristics which can be observed by the respective techniques are outlined in Table A4.2 and detailed in Annex 4.

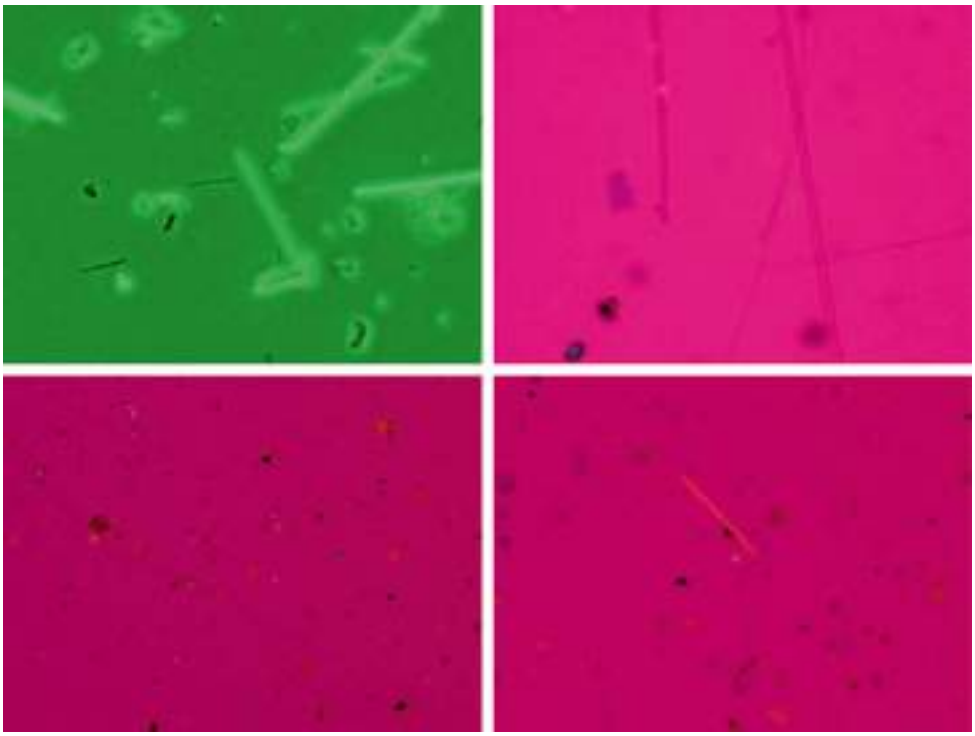

Figure A4.1 Discrimination of MMMF using PCM/PLM light microscopy
Top left: imaged by PCM (40× objective) with green filter only.
Top right: imaged by PCM/PLM (40× objective) with cross-polars and first-order red plate. Bottom left: Imaged by PCM/PLM (10× objective) cross-polars and first-order red plate MMMF.
Bottom right: imaged by PCM/PLM (40× objective) cross-polars and first-order red plate with both MMMF asbestos fibres.

Table A4.2 Properties and the techniques by which they may be observed

Property	**Techniques**						
	PCM	PLM			UV	SEM	TEM
		Plane-polarised light	Crossed polars	First-order red (or other compensator)	Fluorescence	EDX	EDX + SAED
Morphology	✓	✓	✓	✓	✓	✓	✓
Relief	✓	✓		✓			
Colour		✓					
Pleochroism		✓	✓				
Birefringence			✓	✓			
Extinction angle			✓				
Sign of elongation				✓			
Fluorescence					✓		
Elemental composition						✓	✓
Crystal structure							✓

PCM/UV fluorescence microscopy

A4.16 Many natural and synthetic organic fibres fluoresce when exposed to UV light of suitable wavelength. Aromatic structures such as para-aramids (eg Kevlar and Twaron) fluoresce strongly and this fact is used in their analysis[97] (see also Annex 4). Also, many synthetic organic fibres have added optical brighteners which are highly fluorescent. Untreated asbestos does not fluoresce. Fibres of one composition will fluoresce in a particular wavelength range; this will be manifest as a particular colour, and will be a strong indicator of fibre identity. As described in paragraph A4.8, a range of standards can be prepared for comparison. The general analytical procedure will be similar to that described in paragraph A4.13, changing between PCM and UV fluorescence as appropriate. However, **additional care must be taken to make sure that the countable fibres are those that undergo further examination, by fluorescence. If the sample is analysed on a separate microscope to the PCM count, an evaluation that leads to a reduction in the PCM count cannot be employed**. The characteristics of a satisfactory UV fluorescence microscope are similar to those given in Annex 2 for PCM with the important exception that **special optics are needed for fluorescence work.**

A4.17 Protein-based fluorescent-labelled protein probes, which will selectively bind to the surface of asbestos fibres, have been under development in Japan for several years.[98] The technique uses two specific protein probes which bind to the surface of either the chrysotile or amphibole asbestos, each of which fluoresces at a different wavelength. In laboratory trials they have been shown to coat even very thin asbestos fibres with a sufficient layer to render them visible in the fluorescent microscope.[99] The stability of the protein probes with temperature etc initially limited their routine use and mixed results have been obtained when used with field samples. However, with further ongoing research and advances it is likely that the method can be validated under field conditions for positive discrimination of asbestos fibres.

DISCRIMINATION BETWEEN FIBRE TYPES BY SCANNING ELECTRON MICROSCOPY

Strategy

A4.18 For SEM analysis each fibre seen is counted and examined by EDXA and the result of this reported independently of the PCM count. An international standard method ISO 14966[100] is available for this analysis. However, this is based on using a different filter medium (pre-gold-coated track-etched polycarbonate filters), which are not suitable for PCM, and these samples must be collected in addition to the PCM samples. In general SEM/EDXA should be able to determine the elemental composition of fibres that are visible by PCM. A semi-quantitative assessment of the elemental peak heights is used to discriminate between asbestos and non-asbestos fibres and to classify the type of asbestos. Smaller van-mounted portable SEM/EDXA systems have been developed by several microscope manufacturers, which can be used on site to discriminate and count asbestos fibres on a specific type of (track-etched polycarbonate) membrane filter. These filters are often pre-gold-coated to render their surface conductive.

Sample preparation

A4.19 The polycarbonate filters are mounted onto a conductive SEM sample stub (usually aluminium) appropriate for the type of SEM being used. The filter is attached to the SEM stub using a conductive adhesive tab or carbon-based glue. A quick-drying carbon or silver paint (dag) may also be used at the edges of the filter to ensure good electrical conductivity. If only filters for PCM analysis were collected (eg mixed esters of cellulose), these filters are not stable enough for SEM/EDXA analysis and must be ashed and resuspended in water so that the inorganic particles collected can be refiltered onto a polycarbonate filter. If PCM analysis is also required, following

sampling the membrane filter should be cut in half and one half set aside for each analysis. The half-filter for SEM analysis can be ashed in a low-temperature oxygen plasma oven and the residue from the plasma ashing suspended in water and redeposited onto a polycarbonate filter.

A4.20 It should be noted that the 'indirect' preparation of filters in this way means that any organic and water-soluble fibres collected on the original samples do not form part of the SEM analysis. Following ashing, resuspension in water and redeposition the prepared filters are treated as per samples collected directly onto polycarbonate filters. Great care is needed for indirect preparation of filters and low power must be used when low-temperature ashing to avoid igniting the filter and causing the loss of particles. The process of resuspension in water can also separate asbestos fibres and bundles (especially if ultrasonic treatment is used) and will change the asbestos fibre concentration.

A4.21 Depending on the type of SEM and operating conditions (eg environmental/low vacuum mode or low accelerating voltage) additional carbon or gold coating may also be necessary. The samples may be coated with carbon using appropriate carbon evaporation vacuum coating equipment (which should be capable of a vacuum $<10^{-4}$ torr). Organic volatile components of conducting metal paints or glues have been found to interfere with deposition of the carbon coat unless the adhesives are properly cured. Gold coating may also be used, but the X-ray response for some elements may be reduced and increased scattering of the incident beam may mean additional elements from nearby particles may be present.

SEM analysis

A4.22 The analysis should be carried out using procedures described in (or based on) ISO 14966. The SEM operating conditions should be adjusted to produce a visible image, when scanning at 2000–2500x (or greater magnification) of a 0.2 µm diameter chrysotile fibre (0.5 mm on the screen) and with the lens current accelerating voltage, spot size, working distance, aperture etc, set in the format for routine fibre counting and analysis. A suitable reference sample should be maintained for these parameters to be tested. The SEM should be fitted with a suitable EDXA system for elemental analysis of fibres.

Calibration of the SEM and EDXA system

A4.23 The SEM should be calibrated against a standard grating covering the magnification range (2000–10 000x) used for measuring and sizing fibres. The grating should be traceable to a recognised standard. Normally the EDXA will require calibration using one or more known elements in a reference sample to position the peaks at the correct energy.

Counting and sizing fibres

A4.24 Before any systematic search is started, it is important that a low-magnification scan of the filter surface is conducted to make sure that the dust deposit is uniform, that it is not too dense for fibre counting and that the surface has not been damaged. Searching is best conducted by examining fields of view separated by short distances from each other along a long axis of the available filter area. The fibre counting rules in Annex 1 are used with the full screen area as the graticule. Measurement of fibre sizes can be made directly from the SEM screen at an appropriate magnification (adjusted differently for separate length and diameter measurements if required), or by an on-board measuring system. A predetermined number of fields of view at a set magnification are searched systematically to scan a fixed total area of the filter. The exact number of fields of view, or the area specified, depends on the desired detection limit of the test. If an indirect preparation has been made, the amount of air sampled will need to be adjusted to take account of the additional sample preparation steps. Also, it is normal to specify a maximum number of fibres to be counted and analysed, and a minimum number of fields of view to be searched. The maximum fibre number sets a limit on the likely cost of the test in time and expense. Note: ISO 14966: 2002 excludes fibres attached to particles >3 µm in diameter. The WHO PCM counting rules should be used.

Fibre analysis

A4.25 Analysis should follow or be based on the ISO 14966 method. Care must be taken that a given X-ray spectrum is derived from the fibre of interest only. If possible choose a part of the fibre where there are no contaminating surface particles or adjacent particles which may contribute additional elements to the spectrum (as otherwise this may preclude identification of a fibre as asbestos). The substrate filter and coating will also contribute to the spectrum and to the background, but this is unavoidable. Possible contribution to the EDX spectrum from aluminium stubs must also be monitored by examining particulate-free areas of the filter.

Fibre classification

A4.26 Fibres are classified on the basis of the EDX spectrum collected and by reference to fibre standards analysed using the same SEM conditions. The same strategies can be applied as for discrimination by light microscopy. SEM/EDXA is limited in ability to discriminate by the quality of the spectrum obtained. Three outcomes are possible for asbestos analysis:

- Probable asbestos: the EDX spectra match those from standard samples.
- Possible asbestos:
  - shows the same elements as the standards but with different peak intensities or ratios.
  - asbestos peaks have the correct intensities but there are additional peaks.
  - the fibre diameter is too small to produce a spectrum.
- Non-asbestos: does not contain elements that are expected to occur in asbestos fibres, or contains elements that do not occur in asbestos fibres.

In the 'possible' category the limitations of the method are recognised and additional peaks or changes in the peak intensity can arise from attached or nearby particles contributing to the spectrum collected. X-ray spectra from these particles can be obtained to determine what additional elements are contributing to the fibre spectra; these can be subtracted if necessary. Therefore, for SEM discrimination of asbestos **only the non-asbestos fibres should be used to reduce the count recorded.**

DISCRIMINATION BETWEEN FIBRE TYPES USING TRANSMISSION ELECTRON MICROSCOPY

A4.27 TEM has better resolution than most scanning electron microscopes and the ability to identify and discriminate between asbestos and other mineral fibres of all sizes. However, for the discrimination of PCM fibre counts, only WHO fibres of >0.2 µm in width are counted and identified.

Sample preparation

A4.28 Samples should be prepared by the 'direct transfer' method, which is described in ISO 10312.[101] This method covers cellulose ester filters, cellulose nitrate filters and track-etched polycarbonate filters. The filters are prepared so that the particles collected on the original filter are trapped in a film of evaporated carbon. The filter is chemically dissolved to leave the carbon film supported on a 3 mm diameter EM grid which once dry, is placed into the TEM (see Figure A4.2). For samples which are overloaded an indirect method[102] is also available.

Counting and sizing fibres

Figure A4.2 Transmission electron microscope in use

A4.29 ISO 10312 should be followed but Appendix D of that method should be used for comparisons with PCM counts. TEM specimen grids are examined at both low and high magnifications to check that they are suitable for analysis before conducting a quantitative structure count on randomly selected grid openings. In the TEM analysis selective area electron diffraction (SAED) may be used to examine the crystal structure of a fibre, and its elemental composition is determined by EDXA. For various reasons, it may not be possible or necessary to identify every fibre unequivocally, and fibres are classified according to the techniques that have been used to identify them. A simple code is used to record the extent for which each fibre was identified as it was counted. The fibre classification is based on the inspection of the morphology/structure, the SAED pattern and/or qualitative and quantitative EDXA data recorded.

A4.30 The asbestos count is based on positive discrimination of the asbestos fibres using a stated level of analytical information. This can be achieved at the level of morphology and appearance of the internal structure with one other observation which is consistent with the identification of asbestos. Chemical composition determined by EDXA is probably the quickest and easiest method to combine with morphology for this purpose. However, additional peaks, or changes in the peak intensity, can arise from attached or large nearby particles contributing to the spectrum collected. X-ray spectra from these particles can be obtained to determine what additional elements are contributing to the fibre spectra; these can be subtracted from the spectrum if necessary. To discriminate against asbestos for fibre subtraction, it is necessary only to demonstrate adequately that a fibre is not asbestos. Usually the only reliable discrimination in SAED is a pattern that is not consistent with one of the asbestos minerals (see Figure A4.3 a–b), as the absence of an SAED pattern may occur for a number of reasons (eg larger fibres may be too thick to give an SAED pattern). Also, as many MMMF fibres will not produce an SAED pattern, EDXA will be needed to determine the elemental composition and fibre type.

a b

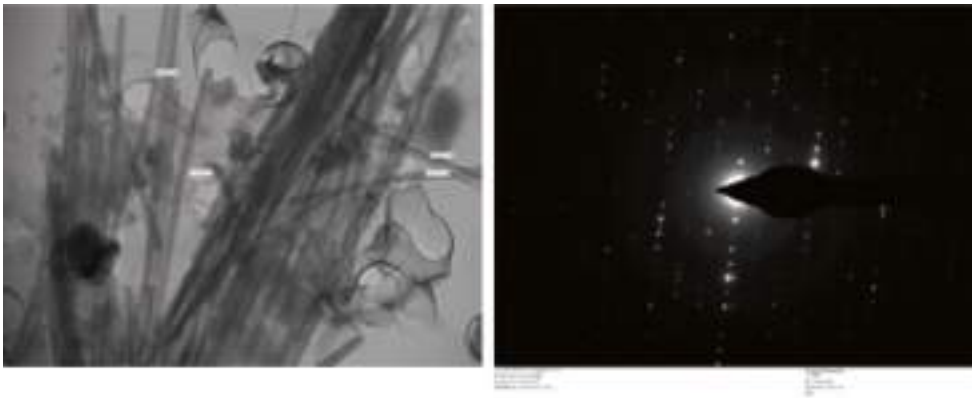

Figure A4.3(a) TEM image of a chrysotile fibre bundle with examples of on-screen measurements of typical fibril width; **(b)** SAED pattern from a crocidolite fibre

Additional discrimination of asbestos from elongated mineral cleavage fragments in air samples

A4.31 The asbestos used in the UK was all imported so there is normally no concern that fibres with a composition similar to asbestos could be asbestos. However, in certain quarry or mining situations it is possible to produce PCM particles that would be counted as fibres from the cleavage of the amphibole minerals. This is a controversial area as they are still the same mineral but have a different fibrous habit. If, in the rare case that the population of fibres seen contain many fibres with aspect ratios of <10:1 (eg mining, quarrying and processing minerals), it is recommended that the fibre counts are also repeated/assessed to exclude WHO fibres with widths >1 µm. This result should be reported along with the original count to help assess whether there is a significant population of elongated mineral fragments. Higher-magnification examination by SEM and TEM of the fibre morphologies (ie for acicular fibres or cleavage planes) may also help to determine whether a significant population of mineral cleavage fragments is present.

CALCULATION AND REPORTING OF RESULTS

A4.32 The initial PCM analysis should be calculated as set out in Appendix 1. When discrimination is applied to a countable fibre, the techniques used and observations made must be recorded. Where a discrimination count, resulting from the second PCM count, is made it should replace the original count and should not be used to ratio the original count. An example worksheet for this purpose is given in Annex 6.

A4.33 Results reported for SEM or TEM analyses should be reported to 'PCM equivalent' fibres (ie fibres >5 µm long, between <3 µm and >0.2 µm diameter and aspect ratio >3:1), on the basis that these fibres should be visible and counted in the PCM analysis. Results can be calculated using the defined method described in paragraph A.1.36) or by using Equation 1 (see paragraph 5.14). However, the graticule diameter (*d*) will need to be replaced by the square root of the average area of the TEM grid mesh openings or the square root of the SEM image at a single magnification; (*n*) is the number of these which are examined. The calculated concentration should be reported along with the upper and lower 95% confidence limits as determined for the number of fibres counted using a one-sided Poisson distribution (as used in the respective ISO methods). The method used for discrimination should be stated (eg positive discrimination using ISO 10312). If the analytical electron microscopy analysis is used to assess the samples with low concentrations of asbestos the analytical sensitivity and precision of the analysis can be improved by pooling samples taken under similar conditions using the method described in paragraph A.1.40.

Accuracy and precision

A4.34 The precision of any fibre counting strategy is highly dependent on the number of fibres counted as it is constrained by the Poisson distribution. The light microscopy methods discussed in this appendix are not expected to be any better than for the PCM analysis discussed in Appendix 1. Additional problems for the accuracy and precision will arise from:

- the potential to mistake the identity of asbestos and non-asbestos fibres;
- their subtraction from the fibre count.

Considering the second factor, when the numbers of non-asbestos fibres exceed the numbers of asbestos fibres, the latter has the greater error associated with the count and therefore the lower precision will not have a large effect on the final result. However, when non-asbestos fibres represent only a small proportion of the total fibres and accordingly have a large imprecision associated with their count, it is important that a reasonable number of them are identified before subtraction. **Therefore, it is recommended that at least 10 non-asbestos fibres be counted before subtraction from a total.** This will give confidence that a substantial number of non-asbestos fibres has been observed and that it is reasonable to subtract them from the count.

SEM and TEM fibre counting and discrimination are similarly constrained by Poisson statistics and positive discrimination of asbestos fibres usually gives increased accuracy and precision for assessing the airborne asbestos fibre concentration.

A4.35 Increased (individual and between) counter bias will be present. The analyst is not only counting fibres but also analysing whether a fibre is asbestos or non-asbestos. These biases must be controlled by training, internal quality control and external quality assurance. The TEM method can use finder grids, so the exact same field can be recounted at any time by another counter. This exact replicate counting is referred to as a verified count and allows detailed assessment and reduction of between-analyst biases. A similar index grid mask is available on special coverslips[103] for PCM counting and PCM/PLM analysis of filters mounted on microscope slides. Motorised computer-controlled stages on microscopes also offer the possibility of returning to approximately the same field of view, if records of the positions are kept.

Limit of quantification

A4.36 For the initial PCM analysis the sampling and analysis will give the same LOQ as detailed in Chapter 5 and Appendix 1. When fibres are subtracted from the second count because they are shown to be non-asbestos the calculated result will be based on the remaining fibres but the LOD is still calculated using 20 fibres (ie the blank filter counts will be unaffected). However, when positive identification and discrimination of asbestos is carried out (eg identification of fibres by analytical TEM using ISO10312) and there is an absence of asbestos fibres on the blank or other samples from the same batch of filters, the LOQ will depend on statistical considerations (eg a one-sided Poisson distribution; see A1.6, A1.53 and A1.56). The ISO EM methods require that all counts of 0 fibres are reported as < 2.99, the analytical sensitivity (1 fibre seen) based on a one-sided 95% probability. When you are calculating a concentration to emphasise the limited precision of the analysis with low fibre counts, 1 fibre is reported as < 4.74 times the analytical sensitivity, 2 fibres are reported as < 6.3 times the analytical sensitivity and 3 fibres as < 7.75 times the analytical sensitivity.

APPENDIX 4: ANNEX 1 Hierarchy of techniques and decision-making

Figure A4.4 shows the hierarchy of techniques and decision-making.

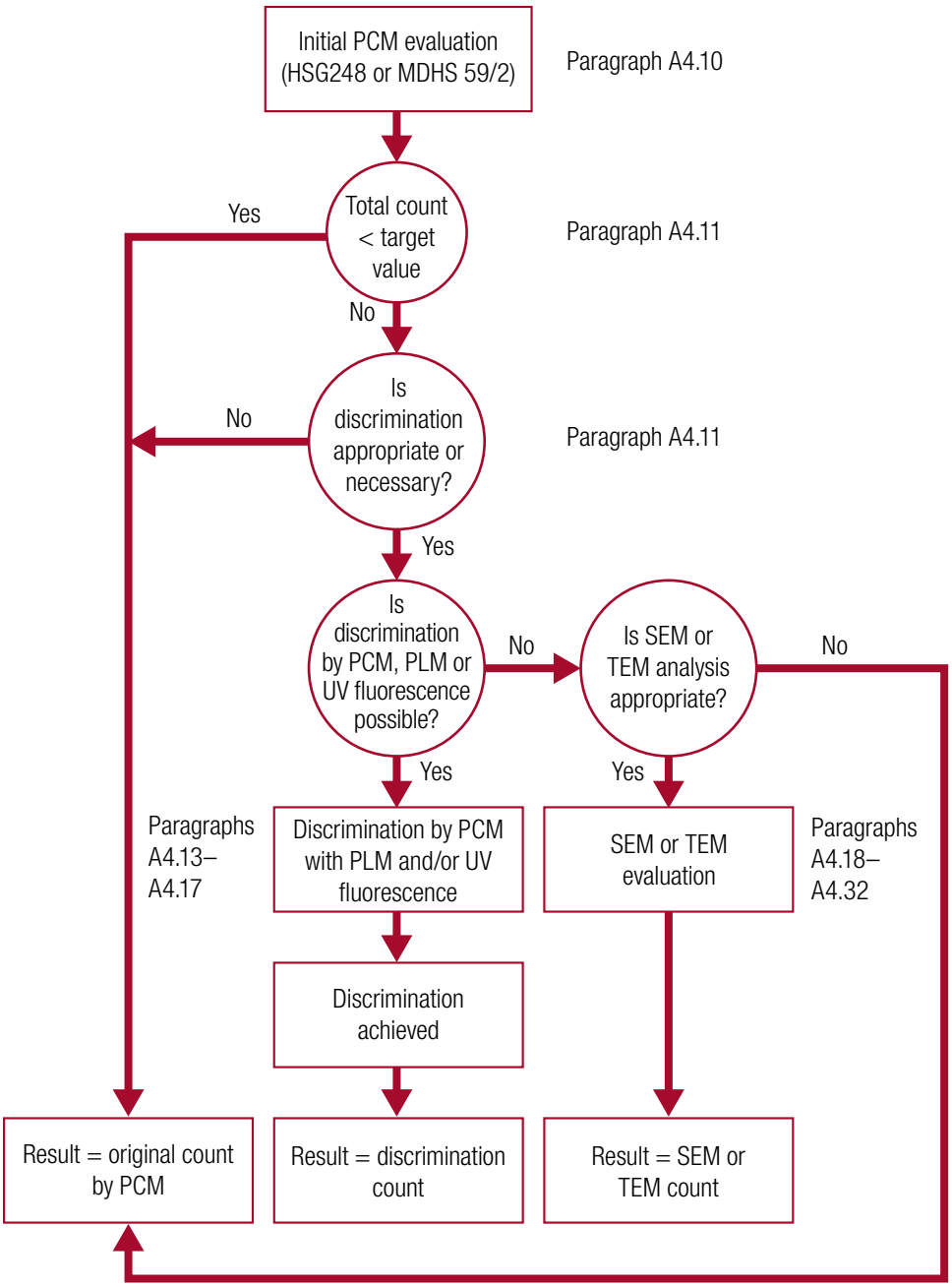

Figure A4.4 Hierarchy of techniques and decision-making

APPENDIX 4: ANNEX 2 Additional equipment required

Additional equipment for PLM

In addition to the equipment specified in Appendix 1, the following are required to permit observations under PLM conditions:

- a polariser (rotatable);
- a removable analyser (may be rotatable);
- a removable first-order red or other suitable compensator;
- a level rotating and independently centrable stage (or a level rotating stage and a centrable objective);
- individual components of the microscope should be from the same manufacturer and must be optically compatible.

Also, the following components may be useful:

- a high-resolution objective (eg 100× oil immersion, 1.25 nominal aperture (NA) (Note: The NA of the condenser must be greater than that of the objective.)
- immersion oil.

Additional equipment for UV fluorescence microscopy

Most UV fluorescence microscopes are specially designed for the purpose, but many can be fitted with equipment and accessories (as above) to enable PCM and PLM to be conducted. Conversely many microscopes configured for PCM and/or PLM can be fitted with accessories that will permit UV fluorescence work to be performed. The modification may affect the tube factor and the graticule must be checked.

APPENDIX 4: ANNEX 3 Observations that can be made by PCM

The following properties can be observed by PCM and may aid identification:

- size;
- shape and morphology;
- aspect ratio;
- relief and refractive index (RI) relative to the filter and other particles.

They are discussed in relation to particular fibre types observed under positive phase contrast. A summary is provided in Table A4.3.

Amphibole asbestos

These properties apply to all amphibole asbestos fibres unless otherwise stated. Generally they are straight fibres; often their sides are parallel, but they may occur as bundles with split and splayed ends. They have high relief because their RIs are considerably greater than those of the mounted filter: fine fibres appear black against a grey background, while thicker fibres have white centres and black outlines, all with surrounding bright phase halos. Their diameters are rarely >1 µm in static samples taken for background, leak, clearance or reassurance investigations; however, personal samples may contain fibres with diameters >1 µm. Many fibres have aspect ratios >10:1. (These properties should be compared with those for MMMF, gypsum, plant and insect hairs, slivers from platy minerals such as talc, exfoliated vermiculite and mica and fibres released during incineration of natural organic matter; see below). Positive identification of crocidolite is possible when fibre diameters are large enough to show the characteristic pleochroic blue colour. Crocidolite fibres often show more curvature than other amphibole asbestos.

Chrysotile asbestos

Chrysotile fibres often are curved; their sides can be parallel, but they also occur as bundles with split and splayed ends. They have lower relief than amphiboles because their RIs are relatively low (although still higher than the cleared filter RI). Fine fibres appear dark grey to black against a grey background, while thicker fibres have white centres and black outlines, all with surrounding bright phase halos. Their diameters are seldom >1 µm in static samples taken for background, leak, clearance or reassurance purposes; however, personal samples taken in asbestos working environments may contain fibres of diameter >1 µm. Many fibres have aspect ratios >10:1.

MMMF (including extruded fibres, wools and ceramic fibres)

Generally these fibres are straight or curved with parallel sides (although some wools contain irregular shapes). There is no splitting of the fibre ends; comparatively thick fibres may show conchoidal fracture. Generally they have relatively large diameters; extruded fibres have mean

diameters >3 µm, and most others have diameters >1 µm. Glass wools and extruded glass fibres show low relief because their RIs are close to those of the cleared filter; however, fibres with relatively large diameters show white centres and black outlines with phase halos. Mineral wools have comparatively high RIs and therefore show high relief. Ceramic fibres have RIs which overlap those for the glass and mineral wools. Many fibres have aspect ratios >10:1. Insulation fibres often are bonded with resin and are distinguished readily by the resulting 'beads' along their lengths.

Diatoms

Diatoms are the silica skeletal remains of small aquatic organisms. Accumulations of these in geological deposits are mined as 'diatomaceous earths' and are often used in hard set thermal insulation on pipes and boilers. RIs of diatoms are lower than those of the mounted sample filter; hence they have low relief and appear white against the grey background. They may occur as acicular fragments resembling straight fibres and in other shapes such as discs and fragments of discs. They have distinctive small holes throughout their bodies, although these may not always be visible. The fragments do not split or splay at their ends. Their fibre diameters are often greater than 1 mm. They usually have aspect ratios <10:1.

Gypsum

Gypsum may appear as straight 'fibres' with parallel sides. The ends of larger particles may show the distinctive trapezoid shape of a single crystal or the characteristic 'V' shape or 'arrowhead' of a twin. These crystals have low relief because their RIs (1.52–1.53) are less than those of asbestos (although still higher than the mounted filter). Also they are lath shaped and tend to lie on their largest faces. Thinness of the laths contributes to low relief; usually they appear grey-black against the background. The visible diameter is often >1 µm. The aspect ratio is usually <10:1 and is not as variable as for asbestos. When gypsum is present there will be many particles of similar appearance which will be too short to be included in the fibre count.

Slivers from talc, exfoliated vermiculite, mica and other platy minerals

These can appear as straight 'fibres' with parallel sides which often show steps. Split or splayed ends, which are characteristic of asbestos, are not generally seen. For some micas the RIs are considerably greater than those of the filter, but for talc and vermiculite the lowest RIs are comparable to those of chrysotile; generally, fine 'fibres' are black against the background while thicker 'fibres' have white centres and black outlines with bright phase halos. There is a wide range of apparent diameters, some being 'sub-micron'. If slivers of these minerals are present (interfering with the fibre count) then plates of the materials will be present as well. The aspect ratios usually are less than those for asbestos, but may be >10:1.

Aramids and other macerated synthetic organic materials

Often the fibres are curved with sides appearing parallel. Also, they can appear as bundles with splayed ends. Aramid fibrils often have a characteristic 'C' shape caused by relaxation when they become detached from the larger manufactured fibres. They show high relief because of the high RI along their lengths, and frequently show white centres and black outlines with phase halos although they are relatively fine (<1 µm). A particular problem is aramid 'pulp'; this can appear as fine fibre, more highly twisted than chrysotile, and with more splayed ends. The RIs of polypropylene (PP) are close to those of the mounted filter and the finest of such fibres will not be visible: diameters usually are >1 µm and many are too large to be included in the count. PP fibres have high aspect ratios, seldom <20:1. Polyethylene (PE) has RIs close to those of the mounted filter and hence shows low relief. They are virtually the same as nylon (as is the high birefringence) and because they are a look-alike for chrysotile will have similar relief. Otherwise, the properties of macerated fibres are similar to those of PP.

Incinerated natural organic materials (such as burnt stubble)

These can occur as straight single fibres, often with parallel sides, and without split or splayed ends. Generally they are opaque and have high relief. Their diameters are seldom >1 µm, although they may be larger than this if originating from close to the source of ignition. They have lower aspect ratios than asbestos. Usually there will be particles of similar appearance present which will be too short to include in the fibre count. If samples are collected close to the source of ignition there will be other opaque or blackened particles present (some of which still show plant morphology). Fine fume may be present.

Dead skin swarf

This material can appear as 'curved fibres' for which the sides are seldom parallel. These 'fibres' often have thickened sections at one end (a residue from the original cell shape) and seldom show the split ends characteristic of chrysotile. They have low relief because their RIs are close to those of the mounted filter; generally they appear as dark grey to black against the background, and usually they are too thin to show white centres or phase halos. Their diameters usually are >1 µm, and their aspect ratios usually are <10:1. When dead skin swarf is present, other dead skin cells with more characteristic morphologies are normally present on the mounted samples. Dead skin cells can be found in all human environments.

Paper swarf

These fibres often are curved; the sides seldom are parallel, and they often have thickened sections at one end (from the original cell shape); they never show split ends, which are characteristic of asbestos, although the thicker fibres may appear to have jagged ends characteristic of mechanically pulped wood fibre. They have low relief (their RIs are close to those of the mounted filter). Their RIs span those of chrysotile (above and below) and hence relief is similar. They generally appear dark grey to black against the background. Usually they are too thin to show white centres or phase halos. Normally their diameters are >1 µm and their aspect ratios are <10:1. When paper swarf is present, usually other paper fibres with more characteristic morphologies are present on the filters.

Plant and insect hairs

These can appear as curved fibres with smooth sides (particularly insect hairs), generally tapering towards one end; often part of the cellular structure can be seen, and occasionally the thicker end of the fibre may retain part of its 'root'. Insect hairs can have high relief. Plant hairs have low relief because their RIs are closer to those of the mounted filter. Often similar to chrysotile. Usually diameters are >1 µm and aspect ratios can be around 20:1. On some mounted samples where hairs are present, other signs of life (including pollens, leaf trichomes, moth scales and fragments of moth scales, which also can appear as fibres) may be seen.

Table A4.3 Summary of properties observed by PCM on air samples

	Morphology	Diameter	Aspect ratio	Relief
Amphibole	Straight; often parallel sides or splayed ends	Seldom >1 µm	Often >10:1	High
Chrysotile	Curved; often parallel sides or splayed ends	Seldom >1 µm	Often >10:1	Moderate
MMMF	Straight or curved	Often >1 µm	Often >10:1	Depends on type
Diatoms	Acicular or circular; holes in structure	Often >1 µm	Usually <10:1	RI < filter
Gypsum	Often straight with parallel sides	Often >1 µm	Usually <10:1	Low
Talc, exfoliated vermiculite, mica, etc	Often straight	Wide range (sometimes sub-micron)	~ 10:1	Moderate for talc and vermiculite; high for mica
Incinerated organics	Straight (often with parallel sides)	Seldom >1 µm	~ 10:1	High
Dead skin swarf	Curved; often thick sections at one end	Usually >1 µm	Usually <10:1	Moderate (similar to chrysotile)
Paper swarf	Curved; often thick sections at one end	Usually >1 µm	Usually <10:1	Low (sometimes similar to chrysotile)
Plant and insect hairs	Often curved; smooth sides; tapered ends	Usually >1 µm	Up to 20:1	Plant hairs low (can be similar to chrysotile); insect hairs high
Aramids and macerated organic material	Aramids curly; polypropylene straight	Usually >1 µm	Aramids ~ 20:1; polypropylene >20:1	Aramids high; polyethylene low; polypropylene low

APPENDIX 4: ANNEX 4 PLM examination of mounted acetone/triacetin filters

CONDITIONS AND PROPERTIES USED FOR DISCRIMINATION

For the purposes of fibre discrimination, positive identification must be made of all fibres that are to be eliminated from the count. The absence of expected optical effects cannot confirm absence of a particular fibre type. The ability to use this technique for discrimination depends on an understanding of relief, pleochroism, birefringence, extinction and extinction angle, and sign of elongation. As fibres are embedded in a filter mount, dispersion staining identification (used for bulk samples in Appendix 2) is not applicable. These can usually be readily assessed only for fibres with widths >0.8 µm using magnifications >400x. Use of optimum PLM conditions, **that is, using oil immersion to maximise resolution,** is recommended. Some of these effects may be visible using a 40x objective of NA 0.65, but high magnification objectives (particularly 1.25 NA oil immersion types) will give better resolution and hence better discrimination between fibres.

Pleochroism

The asbestos varieties chrysotile, amosite, fibrous tremolite and fibrous anthophyllite are virtually colourless under plane-polarised light. Crocidolite has a natural strong absorption which gives a dark blue colour when parallel to the polariser and pale blue-grey when parallel to the analyser. Fibrous actinolite often has a pale green colour when parallel to the polariser. However, it is difficult to observe these properties on airborne fibres on mounted filters under plane-polarised light; a more sensitive test (especially for crocidolite) is to align the fibre in the 45° between crossed polars and to rotate the analyser 5° in either direction from the extinction position: the fibre will show different colours in the '–5°' and '+5°' analyser positions. Fibres which show such a change in colour are pleochroic.

Birefringence

Asbestos

Birefringence of the fibres is the numerical difference between their highest and lowest RIs. It can be assessed with the mounted filter between crossed polars and the fibre aligned at 45° to the plane of vibration of the polariser when maximum interference colours are seen. Interference colours are also dependent on the thickness of the fibre; for asbestos fibres only first-order colours are seen for those <3 µm diameter. Amosite, fibrous tremolite and fibrous anthophyllite have moderate birefringence; crocidolite and chrysotile have low birefringence.

MMMF

Glass, mineral wool and ceramic fibre are isotropic, but strain and size effects occasionally produce low-order interference colours in some areas of some fibres.

Other minerals

The birefringence of gypsum is low and needles collected from an airborne cloud seldom show observable interference colours. Another commonly encountered mineral fibre is aragonite (calcium carbonate), which has extreme birefringence. It may be readily distinguished from other fibres because when it is aligned perpendicular to the polar it has high relief, whereas when it is aligned parallel to the polar it disappears as its RI is almost the same as the filter. Rutile has very high birefringence; even 1 µm diameter fibres have bright interference colours (first-order white). Also, platy materials show higher interference colours than do the equivalent diameter asbestos fibre.

Animal and plant fibres

Some plant materials, especially if thick, display distinctly higher interference than chrysotile of apparently similar dimensions. Dead skin cells will lie on their largest faces and are not birefringent; however, increased thickness of the rolled edges can enhance interference, and it is these edges which generally resemble 'fibres'; crystalline matter frequently adheres to the surface. Paper fibres (swarf) have moderate birefringence, the colours depending on thickness and tightness of the cellulose spiral (which vary with location in the cell). Thus the swarf can show virtually no interference colour for very thin fibres and moderate up to high interference colours for thicker fibres (especially if the flattened cell is 'on edge' (lying on its thinnest edge) or if the swarf originates from near the cell tip). Slivers of talc, mica and vermiculite etc have no birefringence when the sliver seen is part of the flat face of the plate. However, when the sliver is 'on edge', the birefringence is high and, depending on the diameter, interference colours may sometimes be seen.

Para-aramid fibrils

Para-aramid fibres have extreme (very high) birefringence and fibrils of respirable sizes (abraded from large fibres) show bright high-order white interference colours between crossed polars.

Angle of extinction

The asbestos varieties chrysotile, amosite, crocidolite and fibrous anthophyllite show straight ('parallel') extinction when the fibres are parallel to the vibration direction of either the polariser or the analyser; fibrous actinolite and fibrous tremolite show parallel extinction or nearly parallel (<5° from parallel). Cleavage fragments from non-fibrous serpentine or amphibole minerals often show oblique extinction. Fibres showing oblique extinction >5° from parallel are not asbestos. When on edge, the common minerals mica, talc and vermiculite show parallel extinction; when lying flat there is no visible interference. Gypsum and wollastonite have variable angles of extinction depending on orientation. Inclined plates and slivers differ in their angle of extinction depending on their orientation. Uniaxial mica-type minerals show complete extinction when the plates are flat (ie perpendicular to the axis of the microscope). At other orientations they show higher birefringence as when they are resting on one edge, or if the edges of larger plates are curled over or bent they will appear as 'fibres' with bright interference colours.

Sign of elongation

Crocidolite fibres normally have a negative ('length fast') sign of elongation when mounted in RI liquid (eg 1.700). However, when mounted on a cleared MEC filter and observed under PLM, they can appear to have a positive ('length slow') sign of elongation. In some cases, it is possible to observe some fibres with positive sign of elongation, some with negative sign of elongation and others with no clear sign of elongation (ie do not change colour as the fibre is rotated). All other asbestos fibres have a positive ('length slow') sign of elongation. This property can be determined for a fibre under observation only if the interference can be seen. The first-order red plate should not be used for fibres that show interference colours above first-order white when alternative compensators, such as a quarter-wave plate, can and should be used. Fibres with extreme birefringence such as aramids can be confirmed as such by using the first-order red plate when they still appear white in the position of maximum interference. Thus, together with the curly

'C-shaped' morphology, this provides a means of distinction from other fibre types. Another characteristic of Kevlar is its white fluorescence under broad-band UV radiation. This permits discrimination from other fibre types while counting (see also paragraph A4.14).

Table A4.4 Summary of properties observed by PLM

	Pleochroism	Birefringence	Extinction	Elongation
Amphibole	Crocidolite and actinolite are pleochroic	Crocidolite low; others moderate	Usually parallel; (actinolite and tremolite sometimes up to 5°; and complete	Crocidolite usually length fast (negative) but may appear length slow (positive)
Chrysotile	Not pleochroic	Low	Parallel/undulose	Length slow (positive)
MMMF	Not pleochroic	Not birefringent (unless strained)	If showing strain complete, parallel	None, except where showing strain; it can be either length fast or slow
Gypsum	–	Low	Complete, angle varies with orientation	+ve
Aragonite (calcium carbonate)	–	Extreme	Complete, parallel	-ve
Talc, exfoliated vermiculite, mica etc	Pleochroic only in some high-RI micas	Depends on orientation: ranges from high down to zero	Parallel 'on edge'; total when flat	+ve
Wollastonite	–	Low	Varies with orientation	Varies with orientation
Dead skin swarf	–	None when flat; rolled edges may give some birefringence	Attached particles interfere	
Paper swarf	–	None when thin; low to moderate when thick	Parallel; can be incomplete	+ve
Plant fibres	–	Some thick show moderate	Parallel	+ve
Aramids and macerated organic material	-	Aramids extreme (bright white); PE moderate; PP low	Aramids undulose	+ve

APPENDIX 4: ANNEX 5 Discrimination fibre count sheet for PCM/PLM

Table A4.5 shows an example of a reporting sheet for discriminatory fibre analysis. The sheet displays the results of a background count where suspected amosite fibres, MMMF fibres and other interfering fibres are present but which cannot be positively identified. The sheet indicates that the number of fibres to be used in the calculation of airborne concentration is 39 – 16 = 23.

Table A4.5 Example of an analysis sheet of a background count: suspected amosite fibres and MMMF

Laboratory sample: 1054/20			Laboratory report	
Client sample			Sheet 1	
Analyst: MG			Date 13/02/20	
Fibre type being analysed: Amosite			Other known interfering fibres: MMMF	
Strategy adopted: Positive identification of MMMF				
Stopping rules: 200 fields, or 200 fibres, or at least 50 fibres of diameter >1 µm				
Graticule diameter:				
HSE/NPL Mk 2 visibility				
1. Field number	2. Fibres/ field	3. Fibres to examine	4. Characteristics used for discrimination	5. Fibres subtracted
2	1	1		
5	2	1		
		1	Straight, isotropic	1
7	1			
10	1	1	Straight, isotropic	1
13	1	1		
			... and so on ...	
186	2	1		
		1	Isotropic	1
193	1	1		
Analysed fibres (this sheet):	10		*Fibres subtracted (this sheet)*	4
Analysed fibres (previous sheets):	29		*Fibres subtracted (previous sheet)*	12
Total analysed fibres so far:	39		*Total fibres subtracted*	16

APPENDIX 5
Four-stage clearance and decontamination unit clearance methods

SITE CLEARANCE CERTIFICATION FOR REOCCUPATION AND CLEARANCE OF DCU AFTER LICENSED REMOVAL WORK

Introduction and overview

A5.1 There is a statutory requirement for the premises to be thoroughly cleaned after licensed asbestos removal work (CAR Regulation 17). The cleaning is the responsibility of the licensed contractor. The premises or the area(s) where the removal has taken place must also be assessed to confirm that the locations are thoroughly clean and fit to return to the owner/occupier for reoccupation (or, as appropriate, demolition; see ACOP L143 paragraph 430). The cleanliness of the premises should be initially inspected by the licensed contractor. ACOP L143 states that a 4-stage clearance procedure should be conducted and a Certificate for Reoccupation (CfR) issued (paragraph 426). This clearance procedure should be carried out by the analyst after receiving a completed and satisfactory handover form from the licensed contractor.

A5.2 This appendix describes the 4-stage clearance procedures in detail. It also explains the clearance procedures for the decontamination unit (DCU). An overview of these processes is described in Chapter 6 and a summary is provided in Table A5.1.

A5.3 It will be possible to find dust and debris on virtually any surfaces within the enclosure. Particular attention should also be paid to the possibility of asbestos dust and debris being held in the corners, overlaps and folds of sheeting used to construct the enclosure. Other areas include (the list is not exhaustive):

- brackets and clamps around pipes and elsewhere;
- flanges and hatches of vessels and pipework;
- screw holes, or around nails and battens from where asbestos has been removed;
- roof voids;
- cable trays and conduits, especially if they have a metal mesh construction;
- horizontal ledges, shelves, window sills etc;
- the undersides of equipment, furniture and fittings;
- on rough porous brickwork, eg breeze block and rough concrete;
- in holes or cavities in walls etc where pipes, cables or steelwork pass through;
- around drains and sumps.

Table A5.1 Summary guide to the 4-stage clearance process and DCU inspection

Before starting the 4-stage clearance	**The scope of the work should be established at the contract stage to make sure that appropriate time and resources are allocated to the job.** Obtain the signed handover document from the licensed contractor confirming that the work area/enclosure has been thoroughly cleaned and the area **has been inspected and is visually clean.** **Sign and date the document.**
Stage 1	Confirm scope of work. Obtain or prepare diagram showing areas requiring clearance. Visually check: ■ DCU; ■ enclosure surrounding areas, waste and transit routes; ■ integrity of enclosure; ■ interior of enclosure using viewing panels/CCTV. Estimate time thorough visual inspection will take and record it in the CfR.
Stage 2	Thorough visual inspection inside the enclosure. Check: ■ the completeness of the removal of ACMs from the underlying surfaces; ■ for any visible debris including in the airlock and baglock (all compartments); ■ for the presence of fine settled dust.
Stage 3	Air sampling inside the enclosure. Collect 480 litres per sample e.g. sample for 30 minutes at 16 l/min. Disturb surfaces at start of air sampling: ■ by sweeping floors with long-handled brush; ■ by brushing other surfaces using short-handled brush; ■ brush/sweep for at least 1.5 minutes per sample. All air sample results must be <0.010 f/ml for this stage to pass.
Stage 4	After the dismantling of the enclosure, visually inspect area where enclosure was located. Reinspect waste and transit routes for asbestos debris.
DCU clearance process	Visual inspection of the clean end. Thorough visual inspection of shower area and dirty end. Air sampling in the shower area and dirty end. Separate shower and dirty end samples should be collected where combined area exceeds 10 m^2. Collect 480 litres. Disturb surfaces by sweeping floor for 1.5 minutes per sample.

Preparation by the analyst for the four-stage clearance

A5.4 Successful completion of the 4-stage clearance and analyst decontamination relies on the analyst being properly prepared and having the correct equipment available. Enclosures, by their nature, can be variable in size, shape, location and complexity. Access provision and lighting may be needed. There may also be physical obstructions and restrictions. A camera is required for photographic records and video recording equipment may also be used. Equipment will need to be decontaminated and cleaning materials will be required. A list of equipment needed inside the enclosure in given in Table A5.2 and a summary of the main tools and equipment required for the thorough visual inspection and dust disturbance is given in Table A5.3. The analyst should not enter the enclosure to begin stage 2 until it has been confirmed that all the equipment is present and available.

Table A5.2 Equipment that should be present in the enclosure before stage 2 starts

Equipment	Comment
Stepladders/scaffolding/tower	Depending on the height and nature of the enclosure, access equipment will be needed to allow safe inspection of all the necessary high-level surfaces and areas including ceiling voids, ledges, pipework and other horizontal surfaces.
Lighting	A thorough inspection needs lighting; a torch alone will not be sufficient. The torch should be used to supplement the background lighting, not replace it.
Class H vacuum cleaner and other cleaning materials	This will allow the contractor to clean any minor amounts of debris identified by the analyst immediately; a vacuum cleaner should also be available for preliminary decontamination on leaving the enclosure.
Buckets of water and sponges and brushes or wipes in the airlock	To enable preliminary decontamination, following the visual inspection.

Table A5.3 Essential tools and equipment for the analyst to take into the enclosure at stages 2 and 3 (in addition to sampling equipment)

Equipment	Comment
Torch	The torch beam when shone along a surface at a shallow angle is useful in identifying fine settled dust on surfaces. The angle should be as low as possible to give a long beam of light along the surface (see Figures A5.2 and A5.3). It can allow particles to be more easily observed by the shadows they cast and by the scattered light. It can also augment the lighting in the enclosure.
Screwdriver	This is useful for poking behind pipes and into crevices to help inspect these difficult-to-see areas.
Mirror mounted on a flexible rod	Useful to inspect difficult-to-see areas.
Wet wipes	For cleaning tools and assisting in checking for surface cleanliness.
Waterproof camera or a camera in a waterproof housing	To take the relevant photographs (eg see Tables 6.1 and 6.2).
Video recording equipment/camera (not essential but very useful)	To video the key stages, ie the transit and waste routes, the external area around the enclosure, the internal areas of the enclosure (airlock, baglock, enclosure sections etc), capped NPU, sampling pumps and the area after the enclosure has been dismantled (see paragraphs 6.19–6.20).
Broom and brush(es)	Broom and short-handled brush for higher-level/other surfaces for stage 3 disturbance. Note: Other items should not be used to disturb surfaces.

A5.5 The analyst should consult with the licence holder about the potential for contamination of other equipment inside the enclosure (eg there may be fuse boxes or switches that may have become contaminated). A qualified electrician (with appropriate asbestos training) should be employed to isolate the boxes so they can be inspected. Other trades (with appropriate training and wearing suitable PPE and RPE) can enter enclosures under the supervision of the licensed contractor.

THE FOUR-STAGE CLEARANCE PROCEDURE IN DETAIL

Stage 1: Preliminary check of site condition and job completeness

A5.6 The analyst should promptly on arrival confirm the scope of the work done by the contractor (the scope should have been established through earlier involvement; see paragraphs 1.17 and 6.7). The scope should be confirmed by rechecking the POW (eg for changes) and through discussion with the contractor. A suitable and up-to-date POW must be available at the work site

premises (CAR Regulation 7(2)). The contractor's POW must also be shown to anyone who needs to see it including those carrying out the visual inspection and/or air clearance monitoring (ACOP L143). The POW must:

- contain a diagram showing the site layout and the original location of the removed asbestos;
- show the location of any asbestos materials which are to remain in situ;
- indicate which asbestos materials were removed.

A5.7 HSE has provided detailed information and guidance on its web pages on what should be contained in the contractor's POW. If the POW is not suitable or up to date, there is no POW on site or if the contractor fails to make it available, the inspection should either stop until it is made available or a 'failed' CfR should be issued with the reason for the failure noted.

A5.8 A diagram showing the extent and scope of the removal work should be included in the CfR. Electronic or hard copies of the diagram from the contractor's POW are acceptable. If there is no diagram available, the analyst should prepare one. The diagram should contain the main features including the enclosure (or work area), airlock and baglock, transit and waste routes; and skip and DCU facilities. It should provide details of sizes or dimensions. An example of a diagram is shown in Figure A5.1. The analyst and contractor should agree the content of the diagram and both should sign and date it if in hard copy. A note (with date and time) should be entered onto electronic copies of the CfR confirming that the diagram has been agreed with the contractor.

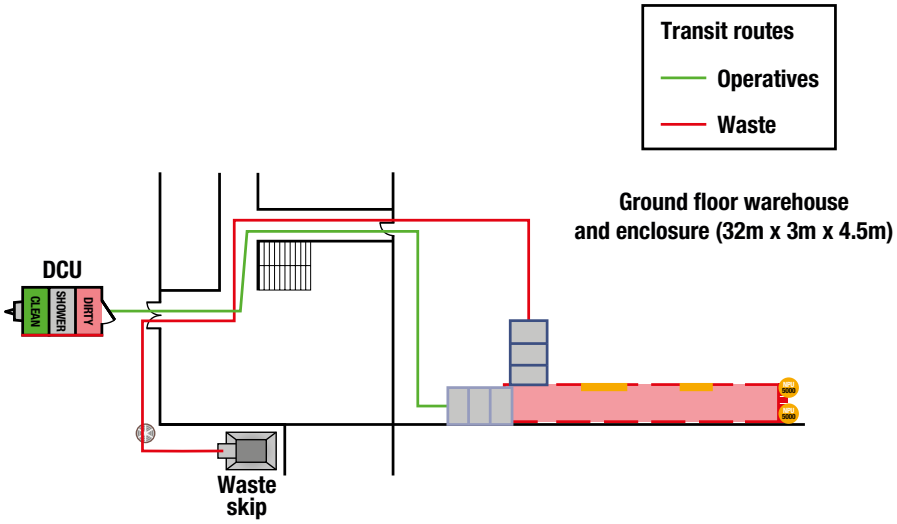

Figure A5.1 Example of a diagram showing the removal area and transit routes

A5.9 When the stage 1 scope of the work has been understood and verified, the analyst should complete a visual inspection of the site. Photographs (as specified in Table 6.1) should be taken to confirm the conditions encountered. The analyst should make sure that the **DCU facilities are still available** for themselves if required, ie fully operational and clean as well as ready for analytical clearance. The clean end of the unit should be checked for cleanliness, hot and cold water and heating. The shower area and dirty end should be inspected either by external viewing (from the clean end in the case of the former) or by entering wearing the appropriate RPE and PPE.
The analyst should confirm that the shower is working with hot water. The water should drain to a safe place. The shower area and dirty end should be clean and free from stored items and the NPU should be operating.

A5.10 The analyst should next **check the surrounding areas to the enclosure** including the transit and waste routes, and the areas immediately adjacent to the enclosure. The purpose is to check for obvious signs of contamination arising from the work; either through leaks from the enclosure, burst waste bags or debris from inadequate decontamination procedures. Particular attention should be paid to surfaces/floor areas next to airlocks/baglocks inside buildings. Check for visible

debris and small piles of dust from damaged waste bags. This inspection does not require the detailed visual examination that is necessary inside the enclosure or work area. The conditions which allow the inspection of the transit routes to take place are set out in Box A5.1 and the arrangements for multi-job sites are summarised in Box A5.2.

A5.11 The analyst should also inspect any ancillary items which have been used to transport waste (eg 'wheelie bins'). These should have been cleaned and be free of visible material (dust and debris).

A5.12 The **integrity of the enclosure** should also be checked. If any asbestos debris is found in the surrounding areas it should be cleared up immediately by the contractor. Any breach in the integrity of the enclosure should be repaired before stage 2 is started. The analyst should make sure that the NPU is in situ and in operation. Air extraction equipment should be switched off just before starting the stage 3 air monitoring and should not be removed until stage 3 of the site certification procedure has been completed and the enclosure is being dismantled. The pre-filters on the NPU should have been replaced with new ones before the final clean by the contractors.

A5.13 The analyst should examine the interior of the enclosure through the viewing panels and/or CCTV before entering to gain an initial impression of the job completeness. Items to look out for include:

- waste remaining in the enclosure;
- visible debris on the surfaces;
- inadequate lighting to conduct a visual inspection;
- essential equipment such as ladders or scaffolding are still present so it is possible to inspect all areas;
- puddles of water, wet patches and leaking pipes;
- evidence that sealant has been applied to exposed surfaces;
- potential hazards inside the enclosure.

A5.14 If any of the items in paragraph A5.13 need attention, they should be dealt with before the enclosure is entered. The analyst should direct the contractor to the matters needing to be rectified. The analyst and the contractor should review what items were identified in the POW as needing special attention (eg ingress of water). The type of action needed to overcome these problems is given in paragraphs A5.67–A5.80. The analyst should make a formal record of the situations encountered and the discussions and actions that took place to rectify them (see Box A5.4).

The enclosure should not be entered until any problems which need attention have been rectified and the analyst is satisfied that all the necessary equipment to complete the process is available.

A5.15 If viewing panels are either absent or are insufficient to allow views of all of the work area (there should always be either a viewing panel or CCTV), then action should be taken to insert a viewing panel where it is possible. If it has not been possible to visually assess the condition of the enclosure before entering, then a note of this should be made in the analyst's site record. The analyst should exercise extra care on entering the enclosure.

A5.16 Findings at stage 1 should be recorded on the CfR and verified with the contractor, before moving on to stage 2. There should be confirmation that the POW has been inspected and that the air extraction equipment, DCU and work areas are intact and operating. This stage should also contain a record of findings of the inspection of the skip/waste route, the transit route, DCU and the outside of the enclosure. A note should be made of any remaining asbestos that was outside the scope of the work.

Box A5.1 Conditions which allow an adequate inspection of the transit and waste routes to take place

Conditions should allow the identification of obvious asbestos debris along transit and waste routes. Under normal circumstances rain or damp ground should not prevent a stage 1 inspection as the analyst is looking for visible debris, not fine settled dust. An inspection at night would not be a problem if the routes were well-lit.

If the analyst considers that conditions did not allow reasonable inspection (eg insufficient light) it should be delayed until the conditions are suitable (eg the following day). In the very rare occurrences where a delay is likely to be significant (eg several days due to snow covering) the analyst should record the situation on the CfR and continue with the remaining clearance stages. The CfR should be issued as appropriate. However, the analyst and the contractor will have to return and complete stage 1 (and stage 4 if necessary) as soon as possible after the conditions allow. The ACOP provides for this variation from the norm in paragraphs 436–437 where it states: 'Site clearance certification for reoccupation should normally be carried out in four successive stages, with the next stage only being commenced when the previous one has been completed.'

If transit and waste routes contain debris that could be mistaken for asbestos, or such that it is difficult to inspect for debris, the analyst should request that the routes be cleared to allow for adequate inspection.

The inspection is for obvious asbestos contamination and debris, not any other kind of debris.

Box A5.2 Multi-job sites

Where there are several jobs ongoing at the same site using, for example, the same waste skip, it will not be possible for a stage 1 inspection to be carried out in that area as it is still being used. In this case the stage 1 certificate should state why that area has not been inspected and clearly identify the area that has been inspected. This principle would apply wherever there are common areas still in use on another job. It is important to be transparent. Record any issue/problem and the steps taken to resolve/rectify the situation on the CfR.

The inspection is for obvious asbestos contamination and debris, not any other kind of debris.

A5.17 The analyst should record the estimated time for the thorough visual inspection on the CfR before starting stage 2.

Estimating how long a visual inspection should take

A5.18 The analyst should make sure that sufficient time is available for the visual inspection. A detailed visual inspection can be time-consuming, and the length of time needed will depend on the size and complexity of the job. A thorough visual search of all areas of the enclosure is required to be confident that the work area is clean and free from asbestos debris and fine settled dust. The analyst should seek to establish the nature and complexity of the area to be cleared at the outset of the contract. These factors will help to determine the estimated time for the thorough visual inspection and assist in the planning and preparation of the work. An estimated time should be determined and entered into the CfR as part of stage 1. Guidance on estimating the time it will take for the thorough visual inspection is given in Table A5.4 and Box A5.3.

A5.19 The times in Table A5.4 have been derived from analysts' own experiences. These times should be used to estimate the likely time for the visual inspection. Where the types of circumstances of visual inspection are not covered in the table, the analyst should derive an estimated time based on the scale and complexity of the clearance and their own experiences. The factors to consider in estimating time are listed in Box A5.3.

A5.20 Each stage 2 inspection will need to be considered on the basis of the individual conditions and circumstances. The analyst should discuss the situation with the licensed contractor. There should be proper consideration of the scope of removal and the factors which will affect the period of inspection (eg ceiling voids, services, cable trays, pipework, high-level surfaces, ledges, access etc; see paragraph 6.2). The visual inspection time is best estimated as part of the initial scoping of the work (see paragraph 1.17). The time required should form part of the formal contractual arrangements for the clearance.

A5.21 The estimated time should be inserted into the CfR and the client and/or licensed contractor should be advised of the expected time. Once the thorough visual inspection has been completed, the actual time taken should be recorded. Where the difference between both times is significant (eg less than or more than 20%), an explanation should be provided (eg access is easier or more difficult than expected; remedial cleaning required). The analyst should build up a data set of estimated and actual times to inform their estimates in the future.

Table A5.4 Estimated times to carry out the thorough visual inspection in various types of asbestos removal scenarios

ACM	Location	Size of area or volume	Complexity/difficulty	Estimated time required
AIB				
AIB	Ceiling tiles plus void	500–600 m^2	Very difficult	8 hours
AIB	Selective ceiling tile removal	200–300 m^2	Not very complex but time-consuming	3–4 hours
AIB single panel	Domestic cupboard, small enclosure	6–10 m^2	Not very complex. Some pipes, shelf, skirting etc	15–30 minutes but up to 1 hour
AIB soffit	External	20–40 linear metres	Not complex but high-level with mobile platform	1–4 hours
AIB	Panel(s) below window	20–30 m^2	Not complex	0.5–2 hours
AIB	Ceiling tiles plus void	25–50 m^2	Quite difficult. Services, cable trays	1–4 hours
AIB	Ceiling tiles plus void	100–150 m^2	Quite difficult. Services, cable trays	2–6 hours
AIB	Ceiling tiles plus void	200–300 m^2	Quite difficult. Services, cable trays. Time-consuming	4–8 hours
Lagging/insulation				
Pipe insulation/lagging	Boiler room	50–100 m^2 (pipes) (150–300 m^3) (vessels)	Complex. Various vessels, pipes, ledges	2–4 hours to 1–2 days
Pipe insulation/lagging remnants from previous removal	Boiler room	50–100 m^2 (pipes) (150–300 m^3) (vessels)	Complex. Various vessels, pipes, ledges	2–4 hours to 1–2 days
Asbestos debris (lagging/AIB)	Ceiling void	25–50 m^2	Quite difficult. Services, cable trays. Time-consuming	1–6 hours

Notes

1 The degree of 'sheeting out' by the licensed contractor will greatly affect the time needed to conduct a visual inspection on similar removal works.

2 Ceiling voids may be devoid of fixtures/fittings or full of them; this will also affect the time required.

Box A5.3 Factors to consider in estimating the time for the thorough visual inspection

- Enclosure/work area size and volume
- Layout of enclosure
- Extent of sheeting out involved
- Items remaining while removal is carried out
- Voids involved (extent of any cabling, pipework, other items)
- High-level surfaces
- Types of surfaces
- Ducting and pipework
- Tunnels/cavities
- Underground
- Any unusual circumstances

Stage 2: Thorough visual inspection

A5.22 Stage 2 should start only once the analyst is satisfied that stage 1 has been successfully completed. This is the stage at which the thorough visual inspection of the enclosure or work area takes place to make sure that as far as reasonably practicable all areas and surfaces within the enclosure are free of any debris and dust. The removal process will have caused spread of asbestos dust and debris inside the enclosure, allowing possible deposits on any surfaces. Residual dust may still remain on any unprotected or inadequately cleaned or hard-to-access places.

A5.23 Any remaining asbestos dust will present a risk when the enclosure is removed. It will present a persistent uncontrolled risk to any subsequent workers, maintenance staff, cleaners and occupants who may disturb the asbestos. Therefore a thorough visual examination of all surfaces is **the most significant part of the clearance procedure**. It is a detailed and thorough visual inspection of all areas, parts, surfaces, items and equipment in the enclosure or work area. It includes any equipment involved in the work and any waste items that have not been removed through the baglock (eg working platforms/access items/scaffolding, vessels, pipework). It will also include any areas that have been opened up or exposed during asbestos removal (eg ceiling voids, floors voids, cupboards).

A5.24 The analyst must visually check:

- the completeness of the removal of the ACMs from the underlying surfaces;
- that any asbestos intended to remain is in good condition (see A5.76);
- for any visible debris left inside the enclosure (or work area) and airlock and baglock (all compartments);
- for any fine settled dust;
- all areas, even those difficult to reach (access equipment should be used as necessary).

A5.25 The inspection can be assisted by using a torch (see Figures A5.2 and A5.3) and by running a wet wipe across the surfaces to check for presence of fine dust. High-level surfaces, including voids, must be checked (see Figure A5.4).

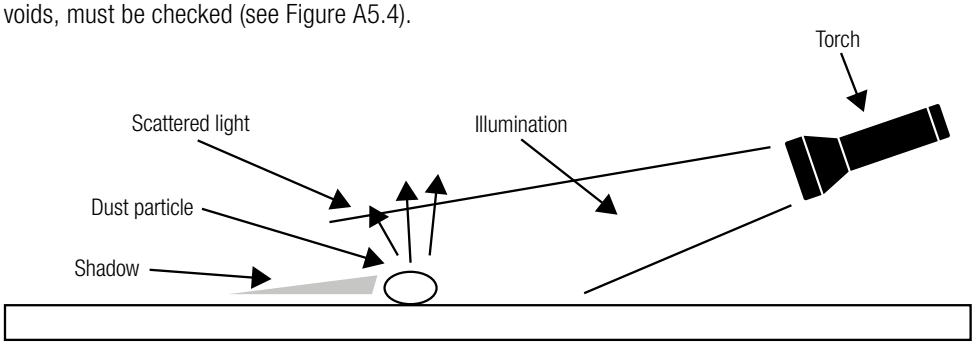

Figure A5.2 Diagram showing the effect of the low-angle torch in identifying dust particles

A5.26 Sufficient photographs should be taken to demonstrate that the interior surfaces are clean and free from debris and fine settled dust. Photographs should be taken of all relevant surfaces including ceiling voids and ledges. Photographs should also be taken to show that ACMs have been completely removed and that the airlock and baglock are free of waste bags, materials and unnecessary equipment. Full details of photographs to be taken are given in Table 6.1. The photographs should be included in the CfR.

Figure A5.3 A torch being used to illuminate fine settled dust

A5.27 A representative of the contractor should be available to rectify any minor problems found during the thorough visual inspection. The representative may accompany the analyst during the inspection for smaller jobs or should enter the enclosure when requested. Minor matters which can be rectified include:

- holes in the enclosure not visible from the outside;
- small amounts of dust or debris found during the course of the inspection.

A5.28 The analyst will have to make judgements on the extent and significance of dust and debris found during the inspection: whether it is minor and can be cleaned up during the course of the inspection, or whether it is more substantial and shows that the final clean has not been sufficiently thorough. **It is the duty of the contractor** to undertake the final clean and carry out a thorough visual inspection before requesting a 4-stage clearance. If it is clear that this has not been done or been sufficient, the analyst should withdraw and fail the enclosure, citing what needs to be done before another inspection is undertaken. **The visual inspection should be failed where the analyst estimates that the cleaning will take more than 10 minutes in total. Where the visual inspection has been failed, the analyst should withdraw from the enclosure to allow cleaning to take place.** The failing may be due to several likely occurrences of minor contamination or one significant incident (see Box A5.4).

A5.29 The analyst needs to remain focused and methodical and be aware that interruptions for random minor recleaning could lead to areas or locations being missed, with the potential for contamination being overlooked.

Figure A5.4 Void photo showing locations and extent of surfaces, cables and other items that need to be visually inspected for dust and debris

A5.30 The analyst should visually inspect the floor of the enclosure as it is presented, ie the surface layer of any protective coating such as polythene or plywood/other timber. Any sign of water on the floor may have caused a leakage of asbestos from the enclosure and should be thoroughly cleaned and allowed to dry before starting stage 3. The associated external location may need further checking. Some types of floor surface may require additional treatment (see paragraph 5.41).

Analyst breaks

A5.31 During a large or lengthy clearance analysts should leave the enclosure, decontaminate and take a break every 2–3 hours. Analysts should also be aware of the recommendation in HSG53 paragraph 65 when wearing non-powered RPE; this restricts use of such equipment to 1 hour (see HSG 53). If powered RPE is not worn, analysts should take a break approximately every hour.

Thorough visual inspection completion

A5.32 The findings of the thorough visual inspection and supporting photographic evidence should be recorded in the CfR. The CfR should confirm that:

- the airlock, baglock and enclosure were free from visible debris/contamination;
- all ACMs have been removed and the interior surfaces of the enclosure are free from visible debris and settled dust;
- any scaffolding, access equipment and other items present have been inspected as clean.

As for stage 1, if problems are encountered during the stage 2 inspection, the analyst should make a note or formal record of the situations encountered and the discussions and actions that took place to rectify them (see Box A5.4). The analyst should also note the locations and details in the CfR of any ACMs that have to remain with a recommendation that this information is entered into the management plan/asbestos register.

Box A5.4 Recording stage 2 additional cleaning and clearance failures on the Certificate for Reoccupation

If problems are encountered during any stage of the 4-stage clearance, the analyst should make a formal record of the situation and the discussion and action that took place to rectify them.

Stage 2 requires particular attention. If the enclosure has not been suitably cleaned, the analyst must inform the licensed contractor that additional cleaning is required. The analyst should make a judgement on the extent of additional cleaning likely to be necessary. The cleaning must be carried out by the licensed contractor. If the cleaning is deemed to be 'minor' (ie total cleaning time estimated to be <10 minutes) and is unlikely to breach the control limit (0.1 f/ml 4-hour TWA), this can be carried out without a formal failure being recorded. The need for additional cleaning should be noted on the clearance certificate. The analyst can remain within the enclosure during remediation.

However, should the additional cumulative cleaning be estimated to exceed 10 minutes or be likely to exceed the control limit, the analyst should leave the enclosure (decontaminating as appropriate) and issue a stage 2 failure certificate to the contractor outlining the reasons for the fail. This document will need to be signed by the supervisor as acceptance of the fail. Photographs should be taken of areas which have resulted in the clearance failure.

Following the issue of the failure the clearance process should start again at stage 1 when the removal contractor supervisor has undertaken a further visual inspection and has been assured that the area is fit for the clearance to proceed. The supervisor should issue the analyst with a new handover document confirming that the area has been recleaned and is suitable for independent inspection.

The analyst should make a judgement as to whether full decontamination will be necessary in these circumstances.

Stage 3: Clearance indicator air sampling for the Certificate for Reoccupation

A5.33 Air sampling takes place after the thorough visual inspection (stage 2). The airborne fibre concentration is monitored during simulated worst-case disturbance of surfaces inside the enclosure. The resultant airborne fibre level must be <0.010 f/ml using the method described in Appendix 1. The purpose of the simulation is to make sure that the risk from any remaining non-visible residual surface dust will not give rise to airborne short-term peak fibre concentrations above 0.010 f/ml (eg when dismantling the enclosure and from future activities such as cleaning and maintenance work). This concentration, the clearance indicator limit, is a transient level of cleanliness and not a measure of normal airborne fibre levels. The clearance value is usually monitored by sampling a minimum of 480 litres of air through a membrane filter with an effective diameter of ~20 mm and counting a minimum of 200 fields of view by PCM (see Table 5.2).

A5.34 It is normally possible to clean the enclosed area thoroughly enough for the respirable airborne fibre concentration during simulated disturbance to be below 0.010 f/ml. Therefore a value of 0.010 f/ml is taken as a practical 'clearance indicator' threshold, and the enclosure should not be dismantled until all the measured fibre concentrations in air are below this level. Airborne sampling will not be required in external work where a full enclosure has not been employed (eg soil asbestos removal, removing AIB soffits with a partial enclosure) or, internally, where a full enclosure has not been erected.

A5.35 The NPU should be turned off and capped during the air test. The analyst should check that the pre-filter was changed before the final clean.

Figure A5.5 Simulated disturbance inside enclosure

A5.36 Details of the sampling and analysis are given in Appendix 1. The strategy for sampling and dust disturbance is given in paragraphs 5.37–5.39. Air sampling should start with a simulated disturbance – sweeping the floor (see Figure A5.5) and brushing the surface from which the asbestos was removed and any other higher-level horizontal surfaces. The broom and brush used should be made out of synthetic fibre and should be used to give a representative simulation of cleaning/sweeping activity. For enclosures with floor areas >20 m^2 a broom should be used to sweep the floor, for both ergonomic and practical reasons. A short-handled brush can be used to brush other surfaces. Sweeping and brushing should be carried out for a minimum of 1.5 minutes for each sample.

A5.37 Sampling equipment should be distributed throughout the enclosure (Figure A5.6) with at least half the samplers close to or underneath where the asbestos was removed. The sampling heads should be located at a height of between 1 and 2 metres from the floor and filter holders should point downwards. In tall enclosures (eg vertical pipe work or lift shafts), samplers should be placed at representative exposure heights, especially in areas where residual dust may be difficult to detect. There should always be at least two measurements (unless the volume of the enclosure is less than 10 m^3, in which case one measurement is adequate). With that overriding condition, the number of samples should be at least the integer (whole number) next below ($A^{1/3-1}$) where A is determined as follows:

Figure A5.6 Air sampling during clearance

- If the enclosure is less than or equal to 3 m in height, or in enclosures that are higher than 3 m but where exposure is likely to be at ground level only, *A* is the area of the enclosure in square metres.
- In other cases, *A* is one-third of the enclosure volume in cubic metres; if there are large items of plant (such as boilers) in the enclosure, their volumes may be subtracted from the enclosure volume before calculating *A*.

A5.38 This formula has no theoretical significance and merely serves to generate reasonable numbers. It gives the minimum appropriate number of measurements but personnel responsible for sampling may judge that more measurements are required. A larger number of measurements than this minimum may be needed where an enclosure is obviously subdivided, as, for example, when a whole floor of a building comprises many smaller rooms within the enclosure. Table A5.5 gives examples of the minimum numbers of measurements required.

Table A5.5 Examples of the minimum number of measurements given by the formula ($A^{1/3-1}$)

Enclosure size		Number of measurements
Area (m^2)	Volume (m^3)	
N/A	< 10	1
< 50	150	2
100	300	3
200	600	4
500	1 500	6
1 000	3 000	9
5 000	15 000	16
10 000	30 000	20

A5.39 The size of the enclosure (area and volume), the number of sampling positions, the details of the dust-raising activities undertaken and their duration should be recorded on the CfR. On some surfaces brushing may generate significant amounts of particulate which may obscure the filter. If this is the case sampling/disturbance strategies may need to be modified to take this into account (see paragraphs A5.41–A5.42).

A5.40 Sufficient photographs should be taken to confirm that the areas are dry and the NPUs are sealed. Photographs should be taken of the sampling pumps/locations and of the brush(es) used for disturbance. Full details of photographs to be taken are given in Table 6.1. The photographs should be included in the CfR.

Dusty surfaces inside enclosures

A5.41 There may be occasions when the remaining/original surface in the work area is a source of non-asbestos dust that would generate unreadable filters during sampling. The analyst should be notified of this as soon as possible (eg before the removal work starts or at least before the 4-stage

clearance starts). If the issue has not been discussed before, then it will have to be considered during stage 2. These surfaces should normally be vacuumed by the contractor. The analyst has two options in these situations:

- Proceed with air sampling as normal and, if this produces unreadable filters, the analyst should resample for shorter periods with paired samplers so that the dust loading on each filter is reduced.
- Carry out 'normal' and 'short period sampling' simultaneously.

If readable results of <0.010 f/ml are obtained, stage 3 has been successfully completed and the enclosure can be taken down.

A5.42 If samples fail because of the dust loading, consider spraying a sealant onto the relevant difficult to clean surfaces before a further air test. If a sealant is used, the air test should not be carried out until the sealant is dry (see paragraph A5.80). All the air test results should be included in the CfR. Air test results will be necessary to demonstrate the need for using a sealant.

Assessment of air sampling results

Figure A5.7 Analyst carrying out a PCM count in a mobile laboratory

A5.43 After air sampling, the analyst should exit the enclosure performing the appropriate decontamination procedures for themselves and equipment. Sampling equipment will usually be taken to the mobile laboratory to conduct the PCM analysis (see Figure A5.7). The analyst will normally count the fibres in a minimum of 200 graticule areas and report the calculated fibre concentrations for each sample (Figure 5.6). The analyst must make a clear statement on the CfR whether the enclosure met or failed to meet the clearance indicator value (0.010 f/ml).

Stage 4: Final assessment post-enclosure and dismantling of work area

A5.44 Once stage 3 has been successfully completed, the enclosure can be dismantled. The analyst should remain on site during dismantling (unless the deconstruction is not to take place for some time). After the enclosure has been removed, the analyst should:

- Visually inspect the area to make sure it is clean. At this stage the analyst is looking for obvious asbestos debris that was released from folds in the enclosure sheeting as it was dismantled or from debris or dust which was trapped under the protective flooring (eg under damaged sheeting). (Note: Several layers of protective sheeting may have been used, such as plywood, polythene sheeting.)
- Reinspect the waste route and transit route for asbestos debris after the enclosure has been removed.

A5.45 Any minor debris that is uncovered can be cleaned up immediately using a Class H vacuum and wiping with a wet disposable cloth by the licensed contractor. Appropriate PPE including RPE should be worn. If the area is significantly contaminated (which should be unlikely) and there is the potential for the spread of contamination, the site should be failed, re-enclosed, recleaned, and the visual inspection and disturbed air test repeated.

A5.46 The analyst should record what has been inspected at stage 4, what was found and the outcome on the CfR. This should be accompanied by sufficient photographs of the formerly enclosed area.

Issue of the site clearance Certificate for Reoccupation

A5.47 Once all four stages of the clearance procedure have been passed, the analyst should issue a CfR. Each stage of the certification should have been completed in sequence. The information should be clear and unambiguous so all parties know the scope and extent of clearance and any particular matters which have been dealt with.

A5.48 The template to be used for the CfR is reproduced in Appendix 6. If one of the stages has failed, the reason(s) should be entered into the CfR and the remaining stages struck through. An acknowledgement of the failure should be obtained from the licensed contractor's site supervisor (eg signed hard copies or name entered into electronic version). If the failure occurs at either stage 1 or 2 of the process, the inspections (both stage 1 and stage 2) will need to be repeated. If a new/different **analyst carries out the work, the whole procedure should start again**. If the site fails at stage 3 or 4, it is necessary to repeat these stages only until both have passed. The analyst will then need to cross-refer to and append the certificate where stages 1 and 2 were passed.

A5.49 It is important that the contractor's representative acknowledges the outcome on the certificate issued (including a failed certificate) as this provides confirmation that the result has been passed on. The acknowledgement can be electronic or written. The certificate will provide documentary and photographic evidence of the work undertaken by the analyst and should be retained by the analyst. Copies of the certificate should be issued to the licensed contractor **and** to the building owner or occupier* (eg to allow update of the asbestos management plan). The certificate should bear a unique number. Where a failed certificate is issued, this will be a separate document. It should record the stage and reason for the failure.
(* Where the contractor has appointed the analyst or the analyst does not have direct access to the building owner or occupier, then a second copy of the CfR can be passed to the contractor for further distribution.)

A5.50 Photographs should illustrate why the 4-stage clearance has failed. The photographs should be included in the CfR.

Issue of video recording

A5.51 Where a video recording has been made of the key stages of the 4-stage clearance, it should be issued to the building client and licensed contractor on a memory stick or other storage format.

Inspection certificate for the DCU

A5.52 The analyst should carry out clearance certification of the DCU. The DCU should have been cleaned and checked by the licensed contractor before the formal clearance process. It will also have been inspected by the analyst as part of stage 1 of the 4-stage clearance. The formal DCU clearance consists of a visual inspection of the clean end and a thorough visual inspection and a disturbed air test in the shower area and dirty end.

A5.53 The DCU should be:

- clean and dry (including the shower area) before the inspection takes place;
- entered via the clean end to check that this area is clean and free of bagged materials;
- free of any potentially asbestos-contaminated materials (eg bags containing used coveralls, used/discarded respirator filters, transit clothing);
- subject to a detailed visual clearance inspection in the shower area and dirty end using the same criteria as for enclosures; and
- if the inspection shows that no dust and debris are present, subjected to clearance air sampling in the shower area and dirty end.

Figure A5.8 Static sampler inside DCU shower

A5.54 DCU clearance air sampling should be conducted as follows:

- For small DCUs with a combined floor area in the shower and dirty end of <10 m^2: one air sample is sufficient (the door between the shower and dirty areas should be propped open and the sample head positioned in the doorway).
- Where the combined floor area of the shower and dirty end exceeds 10m^2: a separate air sample should be taken in the shower and dirty end (see Figure A5.8).

A5.55 A minimum air volume of 480 litres should be collected for each sample. During air sampling, the extraction in the DCU should be switched off and capped and surface disturbance should be carried out using a brush for 1.5 minutes for each sample. A separate inspection certificate should be issued for the DCU. The DCU should normally be subjected to the inspection and air sampling at the end of each job and before it is moved off site (see Box 6.1). The analyst should check with the contractor whether or not the DCU is to remain on site following the issue of the inspection certificate and make a note of this on the certificate. Where a DCU is permanently on site, clearance should take place at the end of each specific licensed removal job for which the unit is used.

A5.56 The template that should be used for the DCU inspection certificate is produced in Appendix 6B. The certificate should contain the relevant photographs as listed in Table 6.2. The certificate can be issued as a hard copy or in electronic format. It must be issued to the licensed contractor irrespective of who has employed the analyst.

A5.57 The DCU testing should preferably start after the CfR for the enclosure has been issued. Where the analyst considers the enclosure 4-stage clearance not to be complex the DCU may be tested earlier in the process but no earlier than the start of stage 3. If there is a subsequent failure in the 4-stage clearance process and the DCU has to be reused, then a retest of the unit will be required. The DCU should be fully operational and available until the 4-stage clearance has been successfully completed.

A5.58 The DCU inspection certificate is required only when the DCU is to be moved permanently off site (ie in preparation for the next job). Where, for security reasons, the DCU is only moved off site overnight, an inspection certification is not required. In these situations, information on where the DCU is to be located overnight should be included in the POW. Further information on this can be found in *Asbestos: The licensed contractors' guide.*

Clearance for specific situations

Enclosures involving ceiling voids

A5.59 The removal of ceiling tiles will open up the ceiling space enabling asbestos dust and debris to spread and deposit in the area, particularly next to the void opening. The ceiling void is an extension of the enclosure and will need to be included in the licensed contractor's cleaning and decontamination procedures, and in the subsequent 4-stage clearance process. The void will be subject to a thorough visual inspection and included in air sampling.

A5.60 The area to be included in the clearance will depend on the extent of ceiling tile removal and the presence of any physical boundaries within the void (either natural, such as walls or fire breaks, or installed by the contractor, such as enclosure-style partitions). These factors will have dictated the extent of cleaning/decontamination by the licensed contractor.

A5.61 The full area and fittings inside void sheeting, walls or partitions should be included in the thorough visual inspection where a large number of tiles (in group(s)/area(s)) or all of a room's ceiling tiles have been removed and the licensed contractor has installed physical separation (eg sheeting to the roof) or the void has natural separation from adjoining voids (eg walls or partitions). The area outside the walls/partition/sheeting would not be included in stage 2.

A5.62 The void space will also be included in the stage 3 air sampling. Where there is a defined physical boundary/enclosure in the void area (ie where walls/partitions exist or have been installed), this air volume should be included in sampling number calculation (see Table A5.4). In the absence of physical boundaries in the void, then the notional air space directly above the enclosure should be included in sampling number calculation. (Note, however, that dust disturbance or sampling pump deployment in the void would not be expected.)

A5.63 The area outside the walls/partition/sheeting will also not be included in the stage 4 visual inspection as the main source of any suspect material will not be the ceiling tile removal. Any suspect asbestos material in these areas should be included in the duty-to-manage requirements of the premises dutyholder.

A5.64 In situations involving only small numbers of tiles (eg where only random single or double tiles have been removed, such as for maintenance/installation work), only the immediate surface area (eg about 1 metre from each open edge) around the removed tiles in the void will normally need to be cleaned. This 'immediate area' should be included in the stage 2 visual inspection. (Note: Other surface material or debris outside this 1-metre area may or may not contain asbestos and for practical purposes these more remote areas are not to be included in the thorough visual inspection or in stage 3 air sampling. The void air volume should also not be taken into account.)

Soils and made ground

A5.65 Asbestos removal from soil and made ground will generally take place in the open air and without an enclosure. Licensed work will be subject to the 4-stage clearance process as far as practical. In practice, this will mean:

- The extent of the work area should be established as normal in stage 1. The area should include waste and vehicle movement routes and vehicle and footwear wash stations as well as transit routes for personnel etc.
- There should be a thorough visual inspection of all visible surfaces/areas in the work area for obvious fragments and debris (but not dust) (ie stage 2).
- There will be no requirement for airborne sampling (ie stage 3) due to the external location. A note should be made in the CfR to this effect.
- A final visual inspection should be carried out as stage 4 where any final equipment has been removed after stage 2.

Other enclosure clearance situations, eg non-licensed work

A5.66 Where enclosures are used in the removal of non-licensed materials such as textured coatings, the clearance procedure is simpler, with self-certification by the removal contractor. In these situations, analysts are unlikely to be involved. However, in some circumstances a more formal clearance procedure may be specified by building clients. Dust disturbance air sampling should not be included unless the enclosure is airtight.

Problems commonly encountered during visual inspections

A5.67 Problems can arise from insufficient planning and preparation. Clearance should be considered by the contractor at the very outset of the job. There is a requirement for the contractor to consider clearance in the initial assessment of the work (ACOP L143 paragraph 165). The contractor should identify those matters which will inhibit or impede clearance (eg wet enclosures, loose or naturally dusty surfaces, voids in ceilings that contain mineral wool or other dusts, congested plant rooms that contain multiple pipes or equipment). These issues can normally be eliminated or resolved more easily before the work starts. For example, precleaning of the original dusty floor surface inside the enclosure (ie before fixing the sacrificial floor layers in the enclosure before starting the asbestos removal) can often avoid problems.

Wet enclosures

A5.68 Analysts often find wet enclosures when undertaking clearances. Wetness may be from condensation, dampness, liberal use of water suppression, use of wet blast techniques, leaks from pipes or radiators, incorrect or recent spraying of sealant. The ACOP L143 requires that where practical an enclosure should be clean and dry.

A5.69 If a wet enclosure is identified at the outset of the 4-stage clearance then action should be taken to rectify the situation (eg area will need to be dried up and, if necessary, arrangement of a plumber to enter the enclosure and repair the leak). The incorrect use of sealants, however, may cause significant delays in completing the thorough visual inspection (see paragraph A5.71). An analyst should fail the visual examination if the enclosure is wet and the situation cannot be promptly rectified. If the visual examination does go ahead with the enclosure still wet or damp, photographs of the area affected should be taken and the information clearly recorded as to what areas were wet or damp and why this could not be dried out. Failure to remove and clean away any water should be treated as incomplete cleaning. Lack of time available after cleaning is not an acceptable reason, as this will also make any air disturbance sampling in stage 3 invalid.

Sprayed sealant

A5.70 Sealants should not be sprayed before the stage 3 ('disturbed air test') is completed. There can be exceptions to this but these should be agreed in writing with the analyst at the outset. The type of circumstances would include: if the original floor surface is porous, difficult to clean or may give rise to sufficient non-asbestos dust (eg from concrete) to saturate the filters and invalidate the air test. The analyst can use discretion and, after due consideration and air testing, can allow sealant to be used in these circumstances (see paragraph A5.42). The circumstances should be recorded on the CfR and the air test should proceed.

A5.71 If an analyst arrives on site to carry out a visual inspection and the enclosure is still wet due to sealant being sprayed, the analyst must fail the area and inform the contractor that the stage 2 inspection can be carried out only when the sealant has been washed off and the enclosure is dry. If the sealant has already dried the analyst will have to fail the site and consider the situation. If the evidence suggests that the sealant is protecting a significant amount of asbestos dust which will

cause risk to subsequent occupants the sealant will have to be physically removed and the relevant area(s) recleaned. The owner/occupier should be fully informed that sealant has been used and the implications for asbestos remaining should be explained.

Enclosures with loose rubble or soil flooring

A5.72 The licensed contractor's assessment should identify work areas where the floor surface is loose rubble or soil (eg in an undercroft). It is difficult to achieve clearance with such surfaces. Before the asbestos removal work begins, the loose flooring should be sealed with an impervious layer (eg metal or hardboard sheeting). Following completion of the asbestos removal and dismantling of the enclosure including the protective flooring (ie after stage 3 of the 4-stage clearance), the loose rubble/soil flooring will need to be visually checked to make sure there is no suspicious asbestos debris present. If asbestos debris or suspicious material is identified, then the top layer of the rubble/soil will need to be removed. The depth removed will depend on the level of contamination. The analyst can then check the new exposed rubble/flooring for signs of asbestos contamination. Once the analyst is satisfied that the contamination has been removed, then the area will have passed the visual inspection.

A5.73 If the loose rubble/soil contains asbestos contamination at the outset of the work this material (including the surface of the rubble/soil) should be treated as part of the asbestos removal. During the assessment the licensed contractor needs to decide how to remove the 'contamination' as well as the planned ACMs. The POW should identify the procedure to remove the rubble and loose soil as well as the ACMs. The contractor is advised to consult the analyst before starting the work. The contaminated rubble and soil will have to be removed to a depth where no further contamination is visible. The analyst should check the new exposed rubble/flooring for signs of asbestos contamination as part of the stage 2 thorough visual inspection. If the analyst is satisfied that the contamination/suspicious material has been removed, then the area will have passed the visual inspection.

Clearance with fixed scaffolding or access equipment in place

A5.74 Fixed or mobile scaffolding or other access equipment may have been used inside the enclosure for reasons such as removing high-level panels or ceiling tiles. The equipment should remain inside the enclosure for the thorough visual inspection to allow full access. This equipment should be fully decontaminated during final cleaning by the contractor. The scaffolding and other access equipment should be thoroughly visually inspected as part of stage 2 of the clearance procedures. It should be inspected after it has been used for inspection by the analyst. Particular attention should be paid to scaffolding boards (and gaps between them), poles and fixings. End pieces should have been capped.

A5.75 Following dismantling of the enclosure, the scaffolding/access equipment can be removed. The analyst should conduct a final post-enclosure dismantling inspection of the area that the scaffolding or equipment previously occupied. Any residual material should be cleaned up. (Note: If the scaffolding is to remain for other maintenance work, the ground around and under the scaffolding should be reinspected for debris as far as reasonably practicable. The analyst should highlight in the CfR that there is the potential for some (likely to be minor) debris to be dislodged on final removal of the structure.)

Asbestos intended to remain

A5.76 There may be occasions when some asbestos is to remain in situ in the enclosure. It may be that only damaged asbestos lagging is being removed from pipe work, and that undamaged material is to remain; or it could be that only a proportion of asbestos ceiling tiles is being removed. The analyst should have been made aware of this in the discussion on the scope of work as part of

stage 1. The contractor should have checked the condition of the remaining ACMs as materials in poor condition could lead to a failure in the 4-stage clearance when the analyst checks. If the analyst does find asbestos materials in poor condition these will need to be dealt with (eg repaired, encapsulated or removed, all of which actions are likely to need agreement of the building client and the involvement of a licensed contractor. The 4-stage clearance should stop at this point and the contractor/building client should be informed. The 4-stage clearance should not restart until the matters have been rectified. Any remaining ACMs in good condition should be recorded in the CfR so that the building client can update the asbestos register and management plan accordingly.

Asbestos waste remaining in the enclosure

A5.77 Exceptionally, it may be necessary to retain asbestos waste (bagged or wrapped) within the enclosure until dismantling in stage 4, for example when oversized or bulky waste (such as lengths of pipe work, vessels and large AIB panels) cannot be removed through the baglock system. The items should remain in the enclosure and be visually inspected along with other items to make sure the outer wrapping is free of asbestos debris. The items will need to be moved during the thorough visual inspection to allow the analyst to inspect the underlying surfaces.

Inaccessible or impossible to remove asbestos

A5.78 Spray-applied asbestos is often found in crevices or holes through walls where pipe work or girders run. These may leave asbestos residues that are impossible to remove (see Figure A5.9). In these cases, the analyst may permit the use of non-flammable sealant such as foams or plaster to fill the hole and seal the asbestos within it. Before the sealant is applied the analyst must be satisfied that as far as reasonably practicable the asbestos has been removed.

Figure A5.9 Remnants of asbestos on materials

A5.79 The client (ie building occupier) should be informed of the proposed encapsulation before it takes place. It should be noted in the licensed contractor's POW. The location of the sealant and remaining asbestos should be noted on the CfR so that the client can record the presence of the asbestos in the location register and management plan. If an analyst arrives to find that holes or asbestos residues have already been plugged with foam or encapsulated with a permanent proprietary sealant, the sealant condition should be checked to confirm that it adequately covers the area/material and is intact. If this is not the case, then additional sealing will be necessary before stage 2 can be completed.

Use of encapsulant and sealant

Figure A5.10 Remnants of asbestos on breeze blocks

A5.80 Where asbestos has been sprayed onto porous surfaces (eg breeze blocks, bricks, plaster and concrete), it is almost impossible to obtain an asbestos-free surface (see Figure A5.10). The analyst should satisfy themselves that further removal is not reasonably practicable, and should advise the contractor and/or building client to seal the residual asbestos with a permanent proprietary sealant. The visual inspection can restart once the sealant has been applied and dried**. In these circumstances encapsulation of asbestos should not take place before the analyst has seen the residual asbestos.** A note should be made on the CfR and recorded in the asbestos register and management plan for the premises.

Wet blasting removal

A5.81 'Wet blasting' techniques are now being used to eliminate asbestos residues from previous old, poor-quality or incomplete removal work. Recleans represent a significant proportion of current removal notifications. The level of surface cleanliness achieved is likely to be superior in these situations. However, wet blasting cleaning is not required or compulsory. A satisfactory level of cleanliness can be achieved from conventional removal methods. The analyst should then judge if further cleaning, removal or encapsulation is required.

Quality control and auditing

A5.82 The importance of ensuring satisfactory analyst performance cannot be over-emphasised. Details of quality control and auditing arrangements are set out in paragraphs 2.9–2.17.

A5.83 Analyst organisations should maintain logs of the 4-stage clearance work completed by individual analysts; these could be simple spreadsheets. The logs should contain records of 4-stage clearance failures with details of stage failures and reasons. These logs should be reviewed during the annual audit.

APPENDIX 6 Templates

Table A6.1 Template for the Certificate for Reoccupation

Certificate for Reoccupation			
Laboratory name			UKAS symbol and accreditation number
Address			
Telephone			
E-mail			
Certificate for Reoccupation (certificate and issue number)			
Contract number	Job number	Reference number	
UKAS accredited method/s used and disclaimers: (Note: Methods accredited by UKAS must have a disclaimer if reporting outside the scope of the method)			
Name, address and contact information for the client			
Site address for clearance			
Areas to be assessed and brief description of works, including dates carried out			
Estimated time (hours) for stage 2 thorough visual inspection (discuss with contractor). State if discussed with contractor		**Actual time (hours) for stage 2 thorough visual inspection**	
Time difference between estimated and actual (comment if >20%)			
Attachment number if following are attached	Drawings	Plan of work/extracts from plan of work	ASB5 notification form
Attachment number			
Name, address and contact information for the asbestos removal contractor			
Name, address and contact information for the asbestos removal contractor's site supervisor			
Representative who will confirm start and acknowledge outcome			
Anticipated start of the clearance procedure	Date	Time	
Record receipt of completed handover form	Date	Time	
Confirmed start of the clearance procedure	Date	Time	

Table continues

Table A6.1 *continued*

Stage 1 of 4: Preliminary check of site condition and job completeness					
		Yes	No	Comments	
1.1 State if plan of work checked to confirm areas to be assessed. (Record any problems, difference, fixed installations or ACMs to remain)					
State if the following are intact and operating (record the problem if not)	1.2 Work areas				
	1.3 Enclosures/air extraction: (airlock door flap (middle section) should be deflected by 200–250 mm)				
	1.4 DCU				
State if the following areas/items and their immediate surroundings appear to be free of obvious asbestos debris and asbestos waste sacks (wheelie bins should be free of dust and debris) (record the problem if not). (Note: 1.8 should also be free of unnecessary equipment. If not, or this cannot be established, note this down and continue with the assessment, as the enclosure will be covered in section 2.2)	1.5 Skip area/waste route/wheelie bins				
	1.6 Transit route				
	1.7 DCU				
	1.8 Enclosure/work area				
State if stage 1 is passed or failed. Give time and date		**Passed**	**Failed**	**Time**	**Date**
Comments (if failed, strike through remaining stages and ask the representative to sign the acknowledgement box at the end)					
Details of assessor		Name	Signature		
Stage 1 photos to be inserted/attached to document with date, time and caption					
Photo(s) showing transit route					
Photo(s) showing waste route					
Photo(s) showing area around skip					
Photo(s) showing areas surrounding enclosure					
Stage 2 of 4: Thorough visual inspection					
Requirement		Yes	No	Comment	
2.1 Airlock/baglock/enclosure are free of waste bags, materials and unnecessary equipment					
2.2 All ACMs have been completely removed from the underlying surfaces					
2.3 Interior surfaces inside the enclosure are free from debris and fine settled dust					
State if stage 2 is passed or failed. Give time and date		**Passed**	**Failed**	**Time**	**Date**

Comments (If failed, insert photo of location and strike through remaining stages and ask the representative to sign the acknowledgement box at the end)			
Comments: record if additional 'minor' (ie <10 minutes) cleaning has been required)			
Details of assessor	Name	Signature	
Stage 2 photos to be inserted/attached to document with date, time and caption			
Photo(s) showing airlock free from obvious debris			
Photo(s) showing baglock free from obvious debris and waste bags			
Photo(s) showing ACMs have been completely removed			
Photo(s) showing all interior surfaces are free from debris and fine settled dust. High-level surfaces should be included			
Stage 3 of 4: Clearance air monitoring inside the enclosure			
Sampling information	Yes	No	Comments/values
3.1 All areas are dry			
3.2 Air movers off and sealed			
3.3 No evidence of lock-down sprays			
3.4 Original floor surface uncovered			
3.5 Area or volume of enclosure (state both m^2 and m^3)	m^2	m^3	
3.6 Number of air samples collected	Calculated	Actual	
3.7 Total time of disturbance (minutes)	Calculated	Actual	
3.8 Disturbance used (state type)			
(A drawing showing the sampling positions is included as attachment no.)			

Results (add rows if >5 samples)	Set 1: Fibre conc. (f/ml)	Set 2: Fibre conc. (f/ml)	Set 3: Fibre conc. (f/ml)	Set 4: Fibre conc. (f/ml)
Sample 1				
Sample 2				
Sample 3				
Sample 4				
Sample 5				
Pass/fail				
State if stage 3 is passed or failed. Give time and date	**Pass**	**Fail**	**Time**	**Date**
The area is not cleared/cleared for the enclosure to be removed Test details for the air monitoring are recorded in attachment #				
Comments (If failed, strike through remaining stage and get the representative to sign the acknowledgement box at the end)				

Table continues

Table A6.1 *continued*

Details of assessor	Name		Signature	
Stage 3 photos to be inserted/attached to document with date, time and caption. A photo is required for each pump and associated area				
Photo showing pump 1 and area				
Photo showing pump 2 and area				
Photo showing pump 3 and area				
Add photos showing additional pumps and areas as appropriate				
Photo showing broom used				
Photo(s) showing areas are dry				
Photo(s) showing NPUs are sealed				
Stage 4 of 4: Assessment of site for reoccupation (after the enclosure is removed)				
Requirements	Yes	No	Comments	
4.1 Former enclosure/work area and the immediate surrounding area are free from any visible debris, asbestos sacks and waste				
4.2 Transit route and waste routes are free from any sacks and waste				
4.3 All ACMs in the scope of work have been removed and any known ACMs remaining are intact				
Stage 4 photos to be inserted/attached to document with date, time and caption. Photo(s) should show former enclosure area is clear from debris and other material				
State if stage 4 is passed or failed. Give time and date	**Passed**	**Failed**	**Time**	**Date**
The area **can/cannot** be reoccupied (circle correct option)				
Comments				
Details of assessor	Name		Signature	
Contractor's representative acknowledgement				
I have been advised by…… that the Certificate for Reoccupation has not been issued because the area has failed stage # (# Enter appropriate stage number)	Name		Signature	
	Date		Time	
I have been advised by…… that the Certificate for Reoccupation can be issued as the area has passed all four stages	Name		Signature	
	Date		Time	
(Complete one of the above and strike through the other option)				

Table A6.2 Template for the decontamination unit inspection certificate

Decontamination unit (DCU) inspection certificate				
Laboratory name		UKAS symbol and accreditation number		
Address				
Telephone				
E-mail				
Decontamination unit inspection certificate (certificate number and issue number)				
Manufacturer		Serial number		
Contract number	Job number	Reference number		
UKAS accredited method/s used and disclaimers (Note: Methods accredited by UKAS must have a disclaimer if reporting outside the scope of the method)				
Name, address and contact information for the asbestos removal contractor				
Site address of the DCU for clearance				
Name, address and contact information for the asbestos removal contractor's site supervisor				
Representative who will confirm start and acknowledge outcome				
Anticipated start	Date	Time		
Confirmed start	Date	Time		
Stage 1: Thorough visual inspection				
Requirement		Yes		
DCU is free from waste, debris, dust, contaminated clothing, waste bags etc				
Interior surfaces are free from debris and settled dust				
State if DCU has passed or failed thorough visual inspection: state time and date	**Passed**	**Failed**	**Time**	**Date**
The DCU is **free/not free** of visible asbestos waste, debris and surface dust (circle correct option)				
Comments (If failed, strike through remaining stage and get the representative to sign the acknowledgement box at the end)				
Details of assessor	Name	Signature		

Table A6.2 *continued*

Stage 1 photos to be inserted/attached to document with date, time and caption				
Photo showing clean end				
Photo showing shower				
Photo showing dirty end				
Stage 2: Clearance air sampling inside the DCU				
Sampling information	Yes	No	Comments	
All areas are dry				
Disturbance method used				
Total time of disturbance	Minutes			
Total floor area of shower and dirty end (m^2)				
Number of samples collected				
Results of air sampling				
Results	Set 1: Fibre conc. (f/ml)	Set 2: Fibre conc. (f/ml)	Set 3: Fibre conc. (f/ml)	Set 4: Fibre conc. (f/ml)
Sample 1				
Sample 2				
Pass/fail				
Stage 2 photos to be inserted/attached to document with date, time and caption				
Photo showing brush				
State if DCU clearance air sampling has passed or failed. Give time and date	**Pass**	**Fail**	**Time**	**Date**
The DCU is **not cleared/cleared** for removal from the site and reuse (circle or strike out appropriate option) Note if the DCU is to remain on site for a further job Test details for the air monitoring are recorded in attachment no.				
Comments (If failed, strike through remaining stage and get the representative to sign the acknowledgement box at the end)				
Details of assessor	Name		Signature	
Contractor's representative acknowledgement				
I have been advised by……. that the DCU inspection certificate has not been issued because the DCU has failed stage # (# Enter appropriate stage number)	Name		Signature	
	Date		Time	
I have been advised by……. that the DCU inspection certificate can be issued as the DCU has passed all stages	Name		Signature	
	Date		Time	
(Complete one of the above and strike through the other option)				
Issue of the DCU inspection certificate by the assessor				
Copies of this certificate (certificate number and issue number) were issued to				
Details of assessor	Name		Signature	
	Date		Time	

Table A6.3 Template for personal sampling (to be included in analytical report; see Table A1.1)

Personal sampling report form (State type of personal sampling being carried out, ie 4-hour control limit, 10-minute STEL, specific short duration, suitability of RPE) Sampling type:		
Person's name		
Job title		
Licensed contractor		
Sampling start/finish time	Start	Finish
Sampling flow rate (l/min)		
Types of work carried out by individual during sampling period including duration of each type of work activity		
Type of asbestos product being removed (eg AIB ceiling tiles, pipe lagging)		
Asbestos removal method (eg unscrewing, lift off, scrape)		
Controls used (eg wet spraying)		
Type of RPE worn		
Other factors which may affect the result (eg confined location, external, nailed AIB, significant visible debris, rubble)		
Photos of work area (through viewing panel). Attach photos with date, time and caption		

Table A6.4 Template to be used for handover form (from licensed contractor to analyst before 4-stage clearance starts)

Handover form Licensed contractor's thorough visual inspection form (to be passed to the analyst before 4-stage clearance starts) Copy to be retained by licensed contractor	
Objective: To carry out the thorough visual inspection of enclosure/work area. Areas to be clean from visible debris and dust	
Site address	
Size of enclosure? (see POW) (L×W × H (metres))	
Has a new NPU pre-filter been installed?	Yes/No (If No, explain)
Have all ACM removal locations been checked and certified as free from asbestos?	Yes/No (If No, explain)
Have all floor surfaces/walls/items been inspected and are they confirmed as visually clean?	Yes/No (If No, explain)
Have all ledges, sills, higher level surfaces (including voids where appropriate) been inspected and are they confirmed as visually clean?	Yes/No (If No, explain)
Have ACM removal locations been checked and confirmed as visually clean?	Yes/No (If No, explain)
Have all rooms been checked and confirmed as visually clean?	Yes/No (If No, explain)
Have all cables, wiring and any items to remain in enclosure during the 4-stage clearance been checked and confirmed as visually clean?	Yes/No (If No, explain)
How long did the supervisor's visual inspection take?	
Start time	
Finish time	
Total time hours/minutes	
I certify that I have carried out a thorough visual inspection of the enclosure/ work area and can confirm that the area is visually clean and ready to be made available to the analyst for the independent 4-stage clearance	Supervisor's signature
	Date
	Time
Form to be handed to analyst before 4-stage clearance starts	Analyst's signature
	Date
	Time

APPENDIX 7
Surveying and sampling for asbestos in soil and made ground

INTRODUCTION

A7.1 The identification of asbestos in soil and made ground is part of the risk assessment required by CAR where asbestos could be disturbed during a work activity. Chapter 7 provides an overview of the process to establish if a survey is necessary. This appendix now describes the survey process in more detail. A survey is required only where there is a reasonable expectation that asbestos could be present and that it could present a risk to workers during planned excavation, development, construction or other related work on the site. The need for a survey is decided once an initial investigation has been completed. The initial investigation involves considering the former use of the site and gathering information (desktop study) on whether it is likely that asbestos was present, or used on the site previously. A site visit and walk round is also conducted at this stage to familiarise the risk assessor with the site and the asbestos and other hazards that may be present (see Figure 7.2).

A7.2 The aim of a survey is to determine:

- if ACMs are present, and if so:
  - their location;
  - the forms of ACMs present (if possible, or bound and unbound);
  - the types of asbestos present;
  - an estimate of the amount (see paragraphs A7.14 and A7.37–A7.38).

A7.3 The survey information should be used to plan and control site activities to prevent exposure to asbestos or to reduce it to ALARP and, in addition, to reduce the spread of asbestos.

A7.4 The information in this appendix assumes that reasonable enquiries have been made (see paragraphs 7.10–7.12) and that the conclusion from the initial investigation is that there is a reasonable expectation that asbestos could be present and that site development could present a risk to workers.

A7.5 During the site survey the surveyor will be looking initially for the presence of visible asbestos. As most asbestos fibre imports were generally made into products, most of the asbestos in soil and made ground will be derived from ACMs where the fibres are bound in a matrix or woven together. However, due to previous or ongoing physical damage, the material will often be broken into various size fragments. Weathering will also degrade the matrix and release asbestos fibres into the soil matrix. This will take place at very different rates, depending on the type of ACM. Crushed hard core and demolition material brought onto the site may also contain small fragments and fibres of asbestos (see Figure A7.1). As respirable airborne asbestos fibres present a risk to workers and others, the survey will also need to assess whether asbestos fibres are present. This will involve the collection of representative samples and microscopic analysis.

A7.6 Site surveys for asbestos are usually carried out in two stages: a **preliminary** survey to obtain information, which may be sufficient on its own but which is mostly used to plan the **main** survey. The survey types are described in paragraphs A7.9–A7.18. Surveys for other contaminants (eg chemicals and oil) may also be carried out at the same time.

SCOPE

A7.7 This appendix gives guidance for compliance with CAR but the information recorded can also be used as the basis for additional investigations to support building, planning and environmental consents, and contribute to the determination of contaminated land and hazardous waste under the relevant regulatory regimes. It can also be used to help plan the remediation of the land, so that there are no unacceptable risks. However, a detailed description of the requirements for other regulatory and legal regimes is outside the scope of this appendix and is dealt with in industry-wide guidance.[10–12] (Further information can be found at https://www.gov.uk/government/publications/land-contamination-risk-management-lcrm and https://www.sepa.org.uk/regulations/land/contaminated-land/.)

Figure A7.1 Fly-tipped material brought onto the site can be a source of asbestos

Initial investigation

A7.8 An initial investigation is carried out to gather information about the past use of the site to determine whether asbestos is likely to be present. It will include a desktop study. The review will include checking historical maps and plans (eg Ordnance Survey maps, land registry), previous local and county council or unitary authority records, and seeking out any local knowledge from former workers and nearby residents. This will help to build up an overview of the site and will help prevent unexpected problems and issues arising when site works begin, thereby avoiding delays and cost overruns. The desktop study (and site surveys) also have to take account of the intended future use and development of the site, to determine the likely extent (including depth) of disturbance. A reconnaissance site visit/site walk round is also conducted at this stage.

Preliminary survey

A7.9 A preliminary site survey will normally help establish the extent of hazardous ACMs on the site in broad terms and help plan the main site survey. The extent of the preliminary survey will depend on the size and complexity of the site (see paragraph 7.15). Usually the surface of the site will be surveyed for the presence of suspected ACMs and some sub-samples of the typical suspected ACMs are collected for laboratory analysis to confirm whether asbestos is present. Further exploratory work may also be required before the main survey to confirm whether asbestos is present at depth, or in material brought onto the site (fly-tipped/spoil heaps). For example, if one area from the desktop survey has been identified as a possible tip for waste material, it may be necessary to carry out a limited-depth survey for asbestos. This will determine the extent of this asbestos 'hot-spot' before planning the main site survey.

A7.10 The findings and results of the preliminary survey should be recorded. The position/location and types of any known or suspected asbestos found should be transcribed on a site map or plan, so that the areas of known or suspected asbestos can be compared with the previous site maps and use. It may also provide an initial zoning, so that appropriate precautions can be taken to protect workers (and others) who may carry out further surveys or work that may disturb the site. The preliminary site asbestos plan will form the basis for preparing a more detailed main survey for asbestos.

A7.11 If the preliminary survey does not provide any evidence that asbestos is present, this is all that may need to be done to assess the risk from asbestos. This outcome should be documented. If unexpected asbestos is found at a later time, the risk assessment will need to be revisited and updated and a main site survey undertaken.

Main survey

A7.12 The main survey will be a detailed investigation of the site surface and soil below the surface (ie at depth) for 'visible' ACMs and 'fine' (ie non-visible/microscopic) asbestos. Any buildings on the site will need to be considered separately. HSE has published separate guidance for surveying and sampling buildings. If buildings are to be demolished, a fully intrusive demolition asbestos survey should be undertaken and suspect materials should be sampled for PLM identification of asbestos (see Appendix 2). The building surveys should include any undercrofts, passageways and service tunnels that linked buildings underground.

Surface survey for visible asbestos

A7.13 The **visual surface survey** should build on the information collected in the preliminary survey. Large-scale maps should be used to plan the survey and to record the position, amount (eg number of ACM fragments and/or surface area of the ACMs found per square metre) and a description of the forms of the ACMs found. Although traditional survey methods can be used to record the location information and to transcribe it onto a site plan, modern geographical positioning systems (GPS) and global navigation satellite systems (GNSS) can record the position (and height) with an accuracy of a few centimetres, and link it to a digital image. This information can be recorded on site and downloaded and superimposed onto digital Ordnance Survey maps to give a linked accurate record of the number of fragments, types, appearance, size and location of the visible suspected asbestos debris.

A7.14 A simple zoning of the site can be made based on where visible asbestos debris has been detected but this can be further refined if an estimate of the amount of identified ACMs can be made. This can be in the form of, for example:

- the number of individual pieces of asbestos found per unit area (eg in 1 m^2 or the area of the photograph taken);
- the number and size of the asbestos pieces found per unit area;
- the estimated visible area of the ACMs (using image analysis measurement of the digital images);
- the estimated mass of ACMs or asbestos (not required for risk assessment solely under CAR).

A mass measurement is not required for CAR. However, for other regulatory purposes (eg the assessment of regulated asbestos waste) the survey carried out may require results to be given in terms of the mass percent of asbestos present. An assessment methodology for the quantification of the mass of asbestos in laboratory samples has been prepared.[12]

Accuracy of surface surveys for the amount of ACMs

A7.15 The accuracy to which any surface survey can be carried out will be compromised by the conditions and surroundings (eg amount of vegetation cover, surface water, snow and ice, type of surface material and its level of disturbance) and the size and forms of the asbestos fragments (eg bound ACMs or unbound clumps of fibres). (Note: For an asbestos mass measurement the accuracy will further depend on whether the original asbestos product is recognisable, so an approximate asbestos content can be estimated. A mass percentage analysis also requires accurate information on: the density of the soil/stones and other matrix materials, the density of the ACMs/asbestos, the depth/volume of the surface soil from which the ACMs were collected, the moisture content, the amount of rubble and large material present/discarded etc).

A7.16 The quality of an asbestos soil/made ground survey depends on the competence of the surveyor. Soil surveyors need to be familiar with the forms of original ACMs and, crucially, understand the nature and appearance of the decomposition states of asbestos debris, fragments and pieces in soils. At sites that are particularly muddy from surface disturbances or heavily vegetated it will be difficult to identify visible asbestos and additional measures may be necessary (see paragraph A7.23). Samples representative of the different forms of suspected ACMs found **must** be taken for laboratory confirmation that asbestos is present and which types, if this has not already been done for the preliminary survey.

A7.17 A simple numerical evaluation of the concentration of asbestos fragments per unit area present will have less precision than an estimate of the surface area or mass of asbestos per unit area. The surface area can be recorded on a calibrated digital image but accurate mass analysis is more problematic to conduct in the field. The results per unit area can be plotted or overlaid on the site map and used to zone the site. While semi-quantitative descriptors can be useful these should be applied to individual sites. (Note: Current EA advice considers that if any visible asbestos fragments are present, it should be considered as hazardous waste, which makes a visual examination for fragments of ACMs an important step in zoning the site for remediation.)

Depth surveys for visible asbestos

A7.18 For depth surveys looking for visible asbestos, the material from a trench or hole can be excavated and spread out on the surface (or a plastic sheet). The material removed can then be inspected visually by digging and raking through the soil from sequential depths to look for suspected ACMs. A depth profile of the asbestos content can be built up from the successive excavations. (**Safety note:** It is important that all inspection and sampling is made on the spoil heaps on the surface. Sampling personnel should never enter any trench or hole unless it has been properly shored up. All trenches should be backfilled once inspected.)

Main site survey for fine (non-visible) asbestos

A7.19 A visual survey of the surface for ACMs has the advantage that a large percentage of the site can easily be inspected but only for larger fragments. For smaller asbestos fragments/fibres/bundles it is usually possible to examine only a very small area (or volume) of the site. To do this, representative soil samples should be collected and sent for laboratory analysis. In practice, it is normally practicable to collect representative soil samples from ~1 m^2 areas, and by coning and quartering to collect at least a 1 litre representative sample for laboratory analysis (see Figure A7.2). Usually the top 1–2 cm of soil is sampled for a surface survey. For a depth survey, successive soil profiles are sampled, which may be of 1–50 cm depth, depending on the method used.

Sampling for fine asbestos fibres in surface and depth surveys

A7.20 The aim of this sampling is to collect representative sub-samples which can be examined in the laboratory for asbestos. Therefore sampling design is crucial to collecting appropriate and valid data that addresses the purpose and needs of the investigation. The survey design should seek to make sure that sampling is representative of the site or relevant parts of the site. Sample representativeness will depend on the:

- positioning (location) of the sampling points (ie where samples will be collected);
- number of sampling points;
- size of the sampling units (ie the area or volume at the sampling point from which the sub-sample is collected);
- size of the sub-samples collected and the method used.

Figure A7.2 Example of coning and quartering: the two further quarters will be removed from the sheet

Location of the sampling points

A7.21 There are several approaches for deciding the locations of the sampling points. BS EN 14899[104] outlines a framework that can be used to design and develop a sampling plan depending on the sampling objectives. These are as follows:

- **systematic sampling** where samples are collected using a predefined sampling pattern;
- **probability-based (probabilistic) sampling** designs apply sampling theory and involve random selection of sampling units;
- **judgemental sampling** designs involve the selection of sampling units on the basis of expert/prior knowledge or professional judgment.

Examples of these approaches are shown in Figure A7.3.

A7.22 In practice, at many sites a combination of approaches may be needed, depending on the questions being addressed by the survey and the suspected distribution of the asbestos. The use of a regular grid pattern to divide the site into areas from which one or two sample locations (sampling

units) will be selected, is widely used. A further option is composite sampling where several sampling units are combined or mixed to form the sample. Composite sampling is cost-effective because it reduces the number of analyses needed but it reduces the accuracy of the spatial information and is not usually well-suited for the heterogeneous occurrence of asbestos associated with many sites.

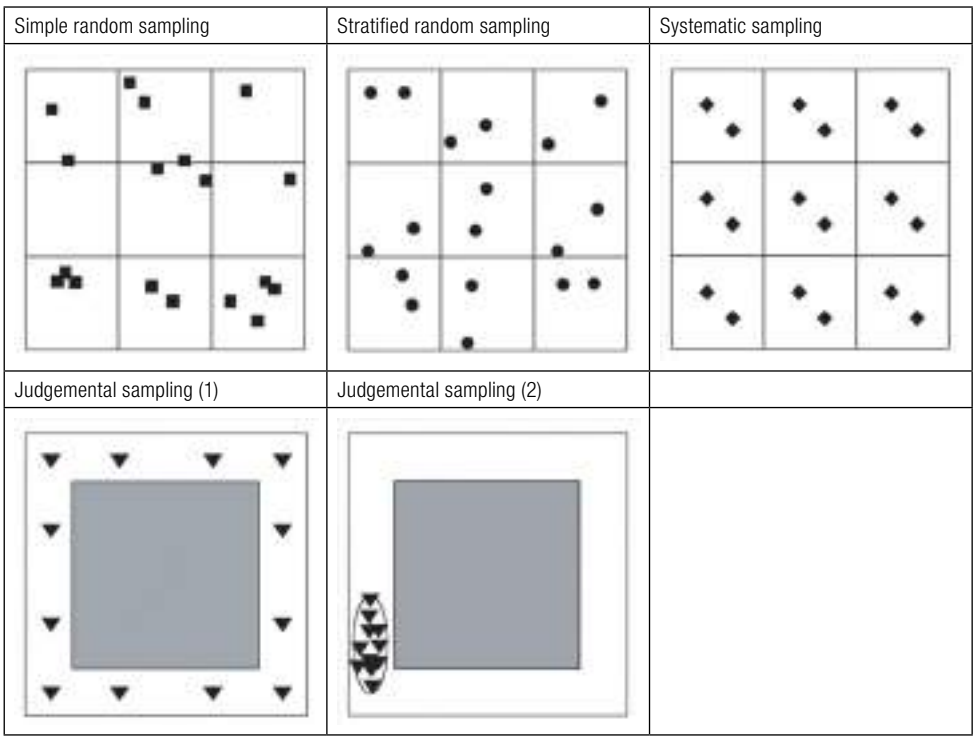

Figure A7.3 Examples of different sampling designs used in BS EN 14899

Design of the survey for fine asbestos fibres

A7.23 The findings of the initial investigation and preliminary survey will determine which sampling design is most appropriate to use for the main site survey. The preliminary survey may suggest that a wholly probabilistic design should be used to determine whether asbestos is present above and below the surface (eg there is no evidence of localised deposits or sources). The size of the site (and of the samples) is an important component of the survey design and more detailed guidance on this can be found in various standards (eg CEN/TR 15310-1 and NEN 5707, BSI 10175, BS ISO 18400-104).[105–108]

Sample numbers

A7.24 The number of sampling units (or points) for surface soil samples and depth samples/inspections will vary with: the area of the site, the type of sample, the sampling design, the variability of the material to be sampled, the objectives of the testing and the required precision and confidence. A minimum of two surface and two depth soil samples should always be taken for analysis and the number of samples increased proportionately with the area of the site. Detailed guidelines for sample numbers for different types of surveys are available. Approximate guidelines for sample numbers for an asbestos survey based on NEN 5707 are as follows for:

- a single site of area (p) >1 ha the number of inspection/sampling points (P) on a non-suspect site can be derived from ($P = 3.5+3.5p$) rounded to a whole number;
- smaller non-suspect sites <1 ha, the number of inspection/sampling points is calculated as ($P = 7+7p$) rounded to a whole number.

When asbestos is present the number of inspection/sampling points is ($P = 9+9p$) rounded to a whole number (where p = area in ha).

Sample unit size

A7.25 Once the location and number of sampling points has been established, the size of the area or volume to be sampled (ie the sampling unit) has to be specified. The larger the sample unit size the more representative the sample will be. For surface soil samples the size of the sample unit is limited by practical considerations. An area of up to 1×1 m can usually be readily worked by spade and fork to remove vegetation before scraping an approximate 1.5–2 cm top layer from the surface into a heap for coning and quartering.

A7.26 For depth samples, the size of the sampling unit should be as large as practicable to increase the representativeness of the sub-sample collected for analysis.

Sample size

A7.27 For a survey for fine asbestos fibres, a specified volume of soil will be sampled to be sent to the laboratory for analysis. Again, the larger the sample unit and sample collected, the more chance that a visible fragment of asbestos will be observed. However, for practical reasons (eg handling the samples at remote sites and in the laboratory), the sample size should be a minimum of 1 litre in volume (~1 kg weight). A representative sub-sample should be collected by coning and quartering. A plastic bag placed inside a measuring container can be used to assess the volume of sample or standard-sized containers can be filled.

Sampling plan

A7.28 A sampling plan should be prepared and available on site before the main survey is undertaken. This will include the aims, objectives, method to be used, the underlying rationale and other supporting information (see Table A7.1).

Sample collection

Sampling/survey equipment

A7.29 For sampling contaminated land the following equipment may be required:

- survey equipment (eg site plan, Ordnance Survey maps, compass, GPS or GNSS, 50 m tape measure, pegs, surveying equipment, digital photographic equipment);
- sampling equipment (eg shovel, spade, trowel, rake, fork, sieve, wheelbarrow);
- coning and quartering equipment (an aluminium plate, mixing board, plastic sheets);
- sample packaging equipment (eg measuring containers, sealable plastic bags/containers, water-resistant labels, indelible marker pens);
- cleaning equipment (bucket, hand-pumped water spray, water carrier);
- powered equipment (powered auger/corer, brush cutters and a mechanical digger).

A7.30 Care should be taken to minimise cross-contamination between samples. This can be achieved by:

- the use of easy to clean tools and/or disposable items;
- suitably cleaning the tools between each sampling unit;
- using new plastic sheets and separate sealable bags/containers for each sample;
- taking care not to step into the unit being sampled.

Survey and sampling personnel may also need to use appropriate controls and suitable PPE (eg respirators, disposable overalls, safety boots) if they are disturbing significant amounts of asbestos.

Table A7.1 Example of the sampling plan information to be collected (BS EN 14899)

General information	Sampling plan completed by
	On behalf of (named person)
	Client (company)
	Site contact
	Other involved parties
	Sampling to be carried out by (company)
	Name of sampler
	Address of site to be sampled
	Map of site with the area to be surveyed clearly defined/marked
	Contact at site
	Other hazards present at the site
	Risk assessment for the sampling personnel
Aims and objectives	Purpose of the survey
	Type of survey/surveys to be carried out
	Target precision of the survey
Sampling approach (with justification)	Specify underlying statistical method for identifying and locating sampling points
	Identify limitations such as maximum number of samples to be collected
	Identify access problems that may affect the sampling programme
Types of material to be sampled	
Sampling methodology	Define areas and depths to be sampled
	Define place and point of sampling and how it can be identified
	Specify date and time(s) of sampling
	Specify people to be present (record name and address)
	Identify sampling techniques (see CEN/TR 15310-2)
	Sub-sampling procedures on site
	Identify equipment
	Specify number of samples to be collected (see NEN 5707 and CEN/TR 15310-1)
	Specify sample size (see CEN/TR 15310-1)
	Specify precautions to prevent cross-contamination
Requirements for on-site determinations	
Sample coding and labelling methodology	
Packaging preservation, storage and transport requirements	
Details of the analytical laboratory	Company name and address
	Contact person
	Delivery date

Soil sample collection for surface and depth surveys

A7.31 When sampling soils and made ground, the available area to sample and the sample itself may include large pieces of non-asbestos debris (eg bricks, metal, concrete slabs) and vegetation (eg trees, roots, bushes and grass). These will reduce the available area for sampling and, in some cases, if a large obstacle is present, it may be necessary to move the sampling point and area sampled in order to collect a sample, if a large obstacle is present. Where practicable, large non-asbestos obstructions/materials can be removed and discarded before sampling.

A7.32 The soil should be sub-sampled by coning and quartering (or riffling). Coning and quartering involves placing the soil from the sample unit onto a board with an easy to clean surface or 1000-gauge polythene sheet wrapped over it. The material is then shovelled into a cone-shaped heap, by repeated shovelling of the edges of the heap onto the top. When the material has been well-mixed in this way, a thin metal plate (or similar) is then used to divide the pile into quarters. Two opposite quarters are removed and the remaining quarters mixed and reformed into a cone-shaped heap, as before. Three successive cycles of coning and quartering will reduce the soil volume from a 1 m^2 surface sample to around 2 litres (one-eighth) of the original volume.

A7.33 For the large volumes of soil moved in trench samples during a depth survey it is not practical to take a representative sample of the whole sample unit by coning and quartering, and so during the detailed field inspection for fragments a series of scoops/shovels should be taken at regular intervals from the spoil. The accumulated material is then coned and quartered to give a minimum 1-litre sample volume. This will represent a much smaller fraction of the soil profile removed. For depth samples where a powered auger or corer has been used, the whole sample can be placed in an appropriate container to preserve the core and soil profile for laboratory examination.

Sample labelling and recorded information

A7.34 Each sample should be labelled uniquely, and accompanied by adequate documentation. The minimum sampling record information that should be collected is listed in Table A7.2.

Sample packaging and transport

A7.35 Each soil sample should be placed in an individual airtight container which is sealed and uniquely labelled. Because the outside of the container may be contaminated in the sampling procedure it should be wiped clean and placed in a second airtight container (or taped polythene bag) labelled with an asbestos warning symbol. In general, it is possible to transport soil samples to the laboratory for PLM analysis. However, if the quantities of asbestos are likely to exceed 10 litres, further regulations will apply.[93] Following analysis, appropriate packaging, labelling and transport will be required for disposal of any asbestos samples at a licensed waste facility. Samples or a representative sub-sample should be retained for a period of six months after the issue of the results.

Table A7.2 Example of the sampling record information to be collected (BS EN 14899)

Section	Content/information required
Sample identification	Sample code (reflect site location, material type and date of collection)
	Date of sampling
	Signature of sampler
General information	Waste producer*
	Client (company)*
	Contact*
	Location of sampling*
	Carried out by (company)*
	Name of sampler*
Survey type and sampling objective, for example	Soil survey
	Surface survey (eg surface debris survey/surface soil survey etc)*
	Depth survey (eg quantitative soil survey, depth profile at three depths etc)*
Material sampled	Type of suspected ACM (eg AC, AIB) or soil or unknown debris
	Estimated moisture content
	Description (eg colour, appearance, consistency/homogeneity/grain size)
Sampling methodology	Describe/define sample unit and sub-population sampled
	Place and point of sampling (including grid reference as appropriate)
	Access problems that affected areas or volumes of material sampled
	Date and time of sampling*
	People present (record name and address of witnesses present where appropriate)*
	Procedure (describe procedure adopted)*
	Equipment used*
	Number of samples collected
	Sample size
	Observations during sampling (eg water infill)
Details of any on-site determinations	If undertaken complete a field record sheet and append to sampling record (eg weighed amount of ACMs in the sample unit)
Sub-sampling and pre-treatment	Identify location (eg on-site or fixed laboratory facility)*
	Procedure*
Delivery to analytical laboratory	Company*
	Delivery date*
	Received by*
	Signature*
	A copy of the sample record should accompany the sample to the laboratory. The sampling position at the site location should also be identified on a site plan or map
Packaging, storage and transport details*	
Deviations from sampling plan*	

* This information can be summarised for batches of samples.

Site survey reports

A7.36 As already explained, site surveys will usually be carried out in two stages: a preliminary site survey followed by a main survey. In some instances, additional sampling may be included in the preliminary investigation. Each survey will need to be reported in a consistent way, so that it is compatible with and builds on the information collected and the recommendations made in the previous survey report. A preliminary site survey report should consist of the following:

- surveyor and client contact information;
- site location, description and address;
- outline of the aim and purpose of the survey in relation to the planned use or redevelopment of the site;
- results of the desktop study;
- conclusions reached, recommendations and reasons for the type/s of main survey required (or not required);
- risk assessment for further surveying and sampling;
- recommended sampling plan for any further surveying and sampling;
- sampling records (including any photographic documentation);
- reports of any laboratory analysis of samples;
- plan/map of the site with any sampling positions marked and showing colour-coded zoned areas as recommended within the industry with: 'No asbestos detected' (green); 'Lower levels of ACMs present' (amber) and 'High levels of ACMs and/or visible unbound asbestos fibres' (red).

A7.37 The main site survey report should include the following:

- the previous survey (ie preliminary) reports from the site;
- the same headers and information as above but updated to reflect the types of survey undertaken;
- the actual sampling plan used for the main site survey;
- an updated plan/map of the site reflecting the results of the additional surveying and laboratory analysis undertaken and zoning the areas accordingly;
- survey conclusions.

Analysis

Method for identifying asbestos and recording the frequency of occurrence

A7.38 The method set out in Appendix 2 of this guidance is used to identify whether asbestos is present and the type. This method can be accredited to ISO 17025 by UKAS. While the method in Appendix 2 is used for the identification of asbestos in bulk materials, it does not give a detailed method for searching the collected soil samples for the presence of asbestos. The additional requirements to carry out this search are given in this section**. UKAS requires that soil analysis is separately identified on its accreditation schedule.** The method for searching and analysing asbestos in soils is summarised in Figure A7.4. A simple procedure for counting and recording the frequency that asbestos fragments/bundles and fine fibres are found during the search is also described. These reported observations are used to zone the site into areas of not detected, detected with low numbers of fragments/fibres and areas with higher numbers of fragments or fibres. It is not necessary to dry the samples before analysis.

A7.39 This appendix does not give a detailed method for measuring the asbestos mass concentration of asbestos fragments but uses sampling procedures that are compatible with other published sampling methods. Consequently, these samples can be further analysed after drying (or stored for further analysis) for their asbestos mass concentration (weight %) if and when required.

Method of searching soil samples for fragments of asbestos materials

A7.40 Sub-samples from large fragments of suspect ACMs (including wads of fibres) can be identified using the procedures in Appendix 2. However, soil samples will also be collected and taken to the laboratory to determine whether asbestos is, or is not, present. Whether any asbestos is detected will depend upon the time and effort put into the searching for asbestos fibres and ACM

fragments. A total search time of around 20 minutes will be needed for a 1–2 litre soil sample to give a meaningful 'non-detected' result. The start and finish times of the search for each stage of the analysis should be recorded. The search procedure is outlined in Figure A7.4.

A7.41 The soil sample under investigation will first need to be spread out on a tray of sufficient size (eg 30×60 cm) to allow the soil to be thoroughly visually examined (see Figure A7.5) and picked through for visible fragments of possible ACMs and fibre bundles (see Figure A7.6). If necessary, separation of fragments by sieving can take place at this stage. This can help to break up some soils and a coarse sieve mesh of 8–10 mm can be used relatively easily to sieve most samples without the need for drying. However, care should be taken to thoroughly clean the sieve between samples to avoid cross-contamination. Any suspect visible fragments of asbestos seen are picked out and placed in a container or Petri dish and, as necessary, cleaned and then analysed using the procedures in Appendix 2.

A7.42 If no ACMs or asbestos fibres are detected by careful visual inspection of the sample on the tray, an approximate 1% sub-sample (eg 8 × ~2.5 ml scoops) is randomly removed from different areas of the tray and placed in a 10 cm diameter Petri dish or larger. The material in the Petri dish is then carefully searched under the stereo-microscope (at 10–20x magnifications) for fibres and fibre bundles. A careful stereo-microscopy search of the 20 ml sub-sample will take around 10 minutes. Any suspect visible fragments of asbestos seen are picked out into a separate container and washed and dried, as necessary, then identified using the standard procedures in Appendix 2.

Quantification of asbestos in soils

A7.43 A detailed quantification of the amount of asbestos in soils is not required under CAR. The identification of the locations (including depth) of asbestos in the soil or made ground on a qualitative basis will indicate whether workers could be exposed to asbestos. It is important to identify areas with higher percentages of bound ACMs and unbound asbestos fibres. This enables a suitable control regime to be implemented. For visible ACMs, the information collected during the site surveys allows marked-up maps (showing the relative amounts or frequency of occurrence) to be produced. However, quantitative information on the fine asbestos fibres is not determined by the methods in Appendix 2. However, if available, the mass results from other published quantitative methods can be used to further refine the site plan to show and zone areas based on the numbers and/or mass of fine fibres and the amount of asbestos present in ACMs determined. If this information is not available, the following additional procedures can be applied to the analysis of the laboratory samples to provide supplementary information to zone the site (see paragraph 7.24) and to control the exposure and risk to workers to ALARP.

Quantification of the number of asbestos fragments

A7.44 Quantification requires that the representativeness and the amount of dilution of the sample being analysed is known. A soil surface sample of 1–2 litres will represent ~1/16th of the original 1 m^2 sample unit, so it is possible to express the results of the analysis in both the number and total surface area/m^2 of asbestos fragments found in the tray sample analysed. (Note: Any large asbestos fragments separated by the surveyor from the same 1 m^2 sample unit will need to be added at this stage.)

A7.45 The numbers of small asbestos fragments found during the stereo-microscope search of the Petri dish sample are also recorded for each sample. Once more than 10 separate suspected asbestos fragments have been found and confirmed (in each of the tray and Petri dish examination), the sample is reported as having a high asbestos content and no further searching and counting is carried out. Otherwise the number of asbestos fragments found in each search is reported.

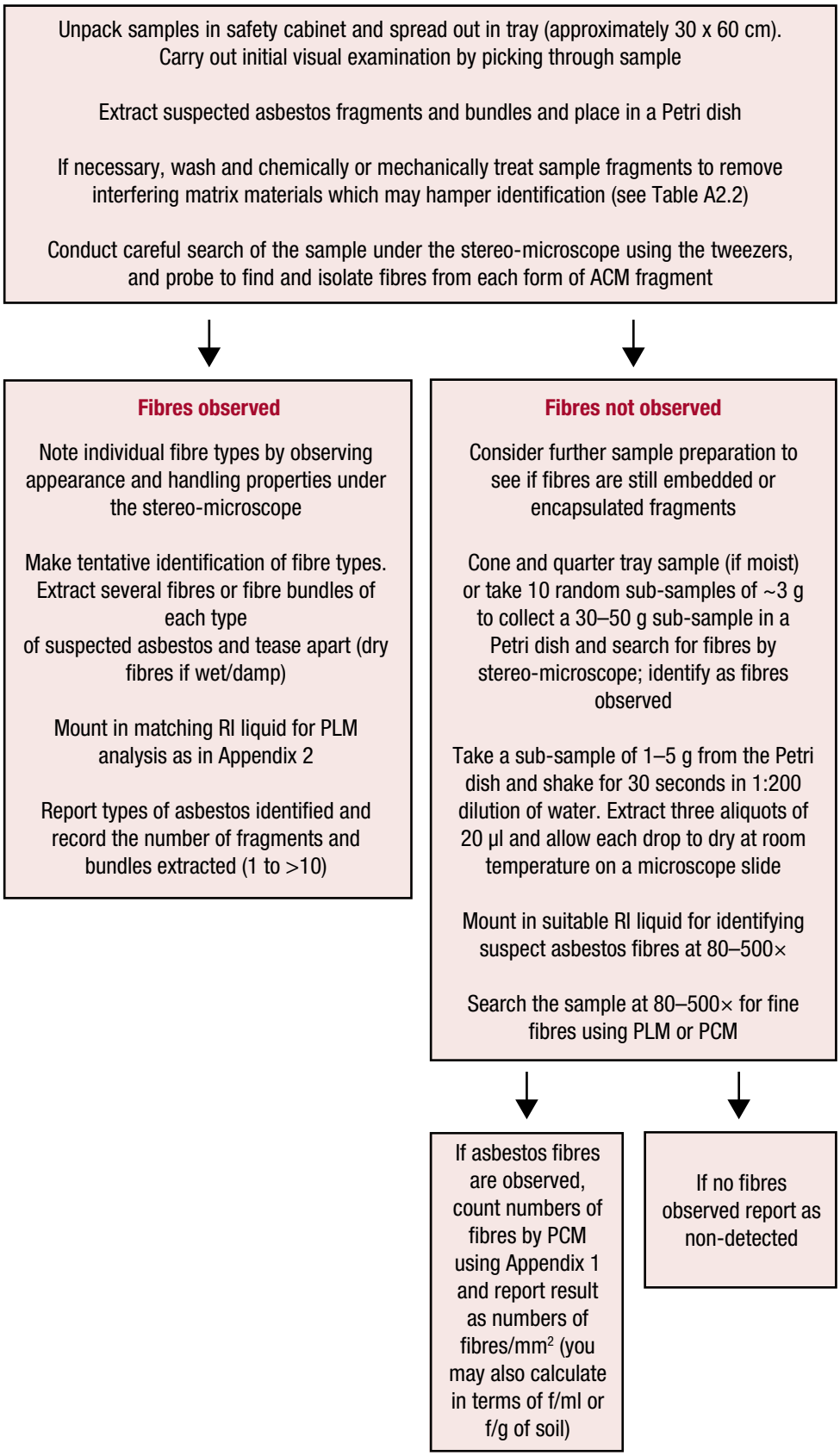

Figure A7.4 Examination of soil samples for asbestos

Figure A7.5 A 2-litre soil sample spread out on a 30 × 60 cm tray for visual inspection for possible fragments of asbestos

Figure A7.6 Examples of similar suspect ACM fragments picked out for cleaning and stereo-microscope examination. The three pieces to the right were confirmed as AC

Quantification of number of fine fibres

A7.46 The shaking of soil in water can be seen as a simple release test to assess the number of fine respirable fibres that are available for potential release from the soil into air. This simple procedure is already used to separate fibres from the soil matrix for PLM identification (in Appendix 2 and this appendix; see Figure A7.4) and the slides produced can (if required) be quantitatively analysed for respirable fibres using the procedures set out in the PCM fibre counting method in Appendix 1. Results from this quantification provide a convenient way to assess and zone areas of the site with high numbers of fine respirable fibres and hence most likely to produce worker exposures unless suitable controls are maintained. As the dispersion of the soil in water is similar to that described in other published methods for quantification,[44, 45] if a 1 ml aliquot is filtered onto a membrane filter, the filter can be retained for quantitative analysis using one of these methods.

Evaluation of drop mounts for identification of asbestos fibre type and number concentration

A7.47 A sub-sample of 1–5 g is weighed and dispersed into water in a 1:200 solid: liquid ratio and shaken for 30 seconds. This is allowed to settle for 5 minutes to remove most of the >10 µm particulates, before withdrawing a 10 µl aliquot from ~3 cm below the surface. This is then pipetted onto a microscope slide. Several such drops on different slides (or two or three spaced along the same slide) can be pipetted. Once they are completely dry (dry flat at room temperature and do not heat to dry), the particles in the deposit adhere firmly to the slide and can be prepared for PLM identification (using an appropriate RI oil and coverslip). The particulates are then scanned and several large fibres/bundles are analysed using the procedures in Appendix 2 at magnifications of 80x or greater to identify the type of asbestos fibres present. Other RI oils can be used to form mounts on other deposits to identify whether other asbestos types are present.

A7.48 To quantify the fibre number concentration, the deposit is counted in the same way as a filter sample using 500x magnification PCM and a Walton-Becket graticule, as described in Appendix 1. The amounts of sample added and the amounts of water used and pipetted should be measured to within ± 2%. The area of the deposit after the drop has evaporated will be relatively consistent and, if required, its diameter can be measured in the X and Y directions with the stage micrometers on the microscope and the area calculated using the average radius. A count of the total numbers of respirable defined fibres can be carried out using a temporary RI mount of water between the coverslip evaporated deposit to give a high-contrast RI mount and good visibility. The fibre count can be conducted in the normal way (see Appendix 1) and the result of the fibre count reported in terms of f/mm^2. If the dilution differs from 1:200 solid: liquid ratio the count should also be reported as adjusted to this ratio. (Note: It is possible to further calculate and report results in terms of f/ml and f/g based on the dilution pipetted and the areas of the deposit and the area counted.)

A7.49 It is important to note that this is only a fibre count and does not identify how many of the fibres counted are asbestos. If the initial PLM identification showed that many non-asbestos fibres were present, it is possible to further identify and quantify the number of ~>0.8 µm wide asbestos fibres. The fibres can be counted and analysed in a matching RI mount for the asbestos type identified (see Table A2.6). Individual asbestos fibres are identified using the typical sky blue and orange dispersion staining colours of the fibre and phase contrast halo (see paragraph A2.46). Different RI oil mounts will be required if more than one type of asbestos is present and for this reason several drop samples are prepared at the same time. The counting and PLM/PCM dispersion staining analysis procedures are described further in Appendices 1, 2 and 4.

Preparation of filters for fibre number and possible asbestos fibre concentration

A7.50 The soil suspension prepared in paragraph A7.46 is vigorously shaken for a further 15 seconds before withdrawing a 1 ml aliquot from 3 cm below the liquid surface after 10 seconds of settlement time. This is then filtered onto a suitable membrane filter and analysed (for further details, see other published methods[44,45]).

APPENDIX 8
Soil and made ground: On-site sampling and measurement of airborne fibres and dust for risk assessment

SCOPE AND METHODS

A8.1 Air sampling of physical disturbances and other activities on asbestos-contaminated land will give a direct measure of airborne fibre concentrations. For many situations the immediate exposure to the person disturbing the soil is the most relevant measurement and personal sampling should be used. Occasionally, on-site activities may also impact people/properties at the boundary of the site and static sampling provision will need to be positioned downwind of the activity. The downwind concentrations may also need to be compared with the upwind boundary concentrations to assess what is coming onto the site as well as from the site.

A8.2 Personal sampling and evaluation of the PCM fibre count is fully described in Appendix 1. Due to battery size, personal sampling has limitations in the flow rate and duration of sampling that can be easily carried out. The lower volume of air that can be sampled and other limitations of PCM fibre counting on membrane filters will restrict the LOQ and personal samples taken for the control limit will generally give reliable limits of quantification only down to about 0.04 f/ml. Static samples can sample for longer periods and/or at higher flow rates to measure concentrations of 0.001–0.002 f/ml (see Table 5.2) if low dust concentrations are present in air. This value is close to that recommended by WHO (2000) for environmental air quality.[109] However, as the PCM fibre count does not distinguish asbestos fibres from other fibre types, analytical EM will usually be required to identify whether the fibres present are asbestos and to achieve a lower LOQ (see paragraph A4.35). Strategies for discriminating asbestos fibres are discussed in Appendix 4 and detailed international standards for environmental monitoring by analytical EM analysis of asbestos are available. **Separate UKAS accreditation is needed for fibre discrimination by PLM/PCM and analytical EM.**

A8.3 If PCM analysis is carried out, it is recommended that the filters are cut in half and an unused half-filter retained for further EM analysis, so that the types of fibres present and their fibre concentrations can be confirmed if necessary. The type of asbestos is an important part of the risk evaluation, as the risk to people from exposure to crocidolite and amosite is greater than that from chrysotile.

Activity-specific sampling and measurement variables

A8.4 This will involve personal sampling over the relatively short time period of the activity or disturbance. Full details of the environmental conditions before and during the sampling will need to be recorded for the exposure to be placed in context with other measurements. Details to be recorded include:

- type of activities and disturbance;
- amounts and types of ACMs in the area disturbed;
- area disturbed;
- distance from source (if static samples are collected as well as personal samples);
- type of vegetation cover and extent;
- soil moisture content, soil type etc.

The impact of these factors (individually and together) on airborne fibre concentration will be variable. However, if the soil surface is damp almost no release of asbestos fibres to air will occur, so on-site tests should focus on dry periods when the soil surface is dry.

A8.5 As activity-specific sampling can be so variable, a range of scenarios may need to be sampled. To obtain dry conditions test areas may need to be protected from the weather and even artificially dried out. Measurement of the soil moisture using moisture meters will provide additional information on the soil's ability to release dust and fibres to air but the key information is the respirable dust concentration released by the activities. Therefore, a personal sampler to measure respirable dust concentration should also be used alongside the membrane filter to directly measure the amount of respirable dust released by the activity. To determine the background dust and fibre contribution to the personal samples, static samples should be taken a short distance upwind of the activity.

Site average sampling

A8.6 If people are likely to be present on or near the contaminated area (eg only a short distance from the site boundary), their average exposure may need to be assessed. In most circumstances the extent of dilution in the environment will be sufficient to discount any significant exposure to people over 100 m from the source. If occupied buildings are closer, sampling may be considered necessary. When possible, long-term static sampling should be carried out to determine the average exposure by the use of weatherproof sampling equipment. Security issues, power supplies and the representative nature of long-term sampling are much easier to control if samples are taken with the co-operation of nearby building occupants. Otherwise remote power supplies (generator or large battery packs) will need to be installed and maintained along with the sampling equipment.

A8.7 For the assessment of risk, the average exposure is the only relevant measure and for boundary sampling the sampling periods should be as long as feasible. If mains supplies are available at secure sites sampling should be over one-week periods or longer. During periods of lower dust concentration, filters may often be analysed by direct analysis of the collection filter when 1–2 m^3 of air per cm^2 of exposed filter are sampled. This is equivalent to a few 8-hour days of continuous sampling at 1 litre/minute on a 25 mm diameter filter.

A8.8 In principle, with low flow rate compensated pumps, individual sampling periods can extend for several days. The longer the sampling period the more representative the sample and the average obtained. This also has the added advantage of reducing the number of samples for analysis and making EM analysis more cost-effective and efficient. The use of analytical EM to determine the type of fibres present in the air samples is critical to the risk evaluation.

Reporting of airborne fibre concentrations

A8.9 Appendix 1 and the ISO EM methods specify well-defined reporting requirements. However, the ISO methods can report a range of fibre size information. For regulatory and risk assessment purposes, an 'index' of exposure is used, based on counts of visible >5 µm long PCM defined fibres which have aspect ratios >3:1 and an upper width limit at the limit of respirability (< 3 µm). For PCM evaluations, this visibility index is automatically selected provided the microscope has been set up correctly, against a test slide. For SEM, a similar visibility criterion is set by adjusting the microscope so that a 0.2 µm width fibre is just visible at 2000x magnification. Transmission electron microscopy (TEM) has higher resolution but, instead of setting to a visibility criteria, the fibre width is measured and a >0.2 µm width applied. Aspect ratios of greater than 3:1 are required for the particle to be counted (Note: Some ISO methods may report aspect ratios of > 5:1, as well).

A8.10 The type of fibre present is of equal importance and all three ISO EM methods have the potential to discriminate between fibre types using the fibre chemistry based on energy dispersive X-ray analysis (EDXA). For SEM this requires use of a higher magnification (10 000x) and some care with interpretation, as there is a greater potential for a contribution from nearby surrounding particles. Full identification of fibres requires the use of electron diffraction and EDXA, which are available on analytical TEMs. TEM can also give more accurate size data than SEM and can be used to evaluate finer fibres if required.

APPENDIX 9 Recommended core competences to be achieved via on- and off-the-job development

Tables A9.1–A9.6 provide a summary of the competences (ie knowledge, skills and expertise) needed by an analyst to perform various asbestos-related activities. When consolidated with sufficient experience, an analyst should be able to complete work to a satisfactory standard. The tables should provide assistance in determining training needs analysis (TNA) and will need to be adapted as necessary as explained in Section 3 in the main document. The employer is best placed to decide needs for each of their own particular job roles and must ensure sufficient training and development is provided on the topics appropriate to each role.

Where external training solutions such as modules required/recognised by UKAS are used, it is expected that the candidates should be examined in person by the awarding/examining body at the end of each module, to make sure that the individuals demonstrate sufficient knowledge and understanding.

The following notes apply to all tables (ie Tables A9.1–A9.6):

1. Each table shows a range of competences to be obtained by the individual. What is appropriate may vary depending on each individual's job and TNA.
2. All competences require the correct combination of knowledge, practical skills and expertise.

Table A9.1 Foundation material: recommended underpinning competences for all subsequent development of the analyst

Competence short description	Detail of core competence
Know the context and nature of the risk from asbestos to human health and how the risk should be addressed, including legal requirements, controls and limits, PPE/RPE, site general and asbestos risk assessment. **Know lone working, decontamination, and disposal and emergency procedures.** **Be able to give basic advice about selection of competent service providers.**	Understanding of health effects/mechanisms of harm; relative potency of asbestos fibre types/groups and the latency effect. Understanding of the cumulative nature of the risk/dose response relationship; the need to minimise exposure; uncertainty or lack of evidence of safe exposure level. Be aware of the requirements for medical examinations for certain work. Explain the added risks from smoking. Understanding of who is most at risk now (building maintenance trades). Understand past industrial exposures re disease and low-level risks in occupied buildings with ACMs but where there is no disturbance from occupation or maintenance activities. Understanding of past uses of asbestos, reasons for use and when restrictions on these uses took effect. Understanding of the properties and characteristics of all main asbestos types and in particular the regulated types. Understanding of the main features/points of the legislation and guidance relevant to the asbestos analyst's work: HSWA 1974 (in particular sections 3, 7 and 8), CAR: features and status of L143 ACOP and guidance, licensed and non-licensed work; Management of Health and Safety at Work Regulations, HSG248 Asbestos: The Analysts' Guide; UKAS guidance LAB 30; and have an overview only of ISO 17025. Understand the principles within the COSHH Regulations and good laboratory practice including the hazards of processes commonly used in fibre identification procedures. Know how to react to an unplanned event in the laboratory (fume cabinet failure, or accidental release of bulk materials from the fume cabinet). Understand the importance of the analyst's role in the asbestos control system and the potential consequences for them and their employer of inaccurate work or lack of integrity or independence from others. If relevant to role, understand the *relevant* main points in the CDM Regulations and HSG264 (but full surveys and detailed knowledge are not included unless these are part of the analyst's job description, in which case see also Table A9.5 on building surveys. CDM stresses role of client so information should be given to client for the health and safety file as well as to contractor. The client (and/or appointed designer/contractor) should allow suitable time/access/resources. Understand the need for suitable RPE and selection process, fit testing, donning/removal procedures and care of equipment. Understand threats to effectiveness, how much protection is likely and how it fits with other methods of control. Know the background to the setting of exposure/control limits and the requirement to minimise exposure below those limits. Have an understanding of how typical asbestos removal and analyst work tasks relate to the control limit, STEL and clearance levels. Be able to assess if a third-party site is safe for them to enter to begin their own work. Be able and prepared to carry out decontamination of self and know emergency procedures in foreseeable circumstances. Recognise when it might be necessary to use a DCU in non-licensed work (eg intrusive survey). Be familiar with ways of checking/testing DCUs for general safety. Be able to identify correct waste disposal, in particular, of own kit and samples, in compliance with the appropriate hazardous/special waste regulations. Be aware of relevant carriage of dangerous goods transport issues. Consider the implications of any lone working for analysts. If they will be expected to do this in their job role: Advise a client on how to select a competent analyst and contractor. (If not part of their specific role this is not applicable.)

Table A9.2 Bulk sampling

Competence short description	Detail of core competence
Taking bulk samples of suspected ACMs while protecting self and others. **Know the range of ACMs and their likely locations.** **Know methods of work, containment/ control, repair, recording and reporting.** **Dealing with unsafe conditions.**	Understand how to take representative bulk samples safely (ie minimising exposure) and to outline suitable simple sampling strategies proportionate to the overall sampling task (eg ranging from isolated samples to up to a small number of samples but less than comprehensive surveying). Have knowledge of basic advice on managing asbestos in buildings (if required, see Table A9.5 for more information on building survey work). Understand how to prepare and present results of sample analysis verbally and in writing. Understand the importance of record keeping. Understand the common uses and locations of asbestos types in a wide range of ACMs in buildings, other structures, plant and equipment and the potential risks. Understand methods for bulk sampling of ACMs demonstrating planning the degree of intrusion, risk assessment, precautions, demarcation (keeping others away), tools, use of PPE/RPE, sample containment both on and off site (ie in transit and personal and sample site decontamination), making good, and any foreseeable larger-scale decontamination and transit procedures. Understand what constitutes representative sampling for a variety of common ACMs and how to deal appropriately with samples and sampling points, containment and recording, photographs and labelling. Understand what steps should be taken on finding unsafe conditions on site from a variety of causes.

Table A9.3 Fibre identification – bulk analysis

Competence short description	Detail of core competence
Application of guidance and theory and practice of microscopy for identification of asbestos fibre type. Strengths and weaknesses of methods. **Laboratory equipment – use maintenance and controls.** **Handling and preparation of samples, use of the range of tests in HSG248. ACM and fibre discrimination protocols and challenges, eg from non-asbestos fibres.** **Quality systems, UKAS requirements, AIMs scheme.** **Be able to prepare suitable reports to a range of clients so they can understand the results.**	Understand and be able to use the different methods required in the specific job role and understand the theory behind identifying regulated asbestos fibres in a bulk sample. Understand basic optics/microscopes used including contrast versus visibility, resolution, use of sub-stage iris and adjustment of interocular distance/focus and numerical aperture of lenses. Understand and be able to set up and use a low-power stereo-microscope and PLM to identify asbestos fibre types/morphology and other fibre characteristics, and be able to use the parts of the microscope. Understand the challenges and limitations of the method and the implications of how the sample was taken (eg if it is representative; heat effects etc). Understand the guidance from HSE and UKAS which is directly relevant to an individual analyst's work (eg protocols for searching for fibres) and the need to check that air tests have been carried out in the areas where bulk analysis is carried out – ensuring a safe environment. Understand the need for safe analysis (eg assess how the bulk sample has been packaged and/or prepared) and the need to minimise exposure and all risks at all stages by selecting correct controls and methods. Understand and, where appropriate, apply the requirements for using/ inspecting/monitoring the performance of controls (equipment/PPE) for both asbestos and other hazards in the laboratory associated with asbestos identification. Recognise the importance of factors such as seating and looking into long distance from time to time and other means of reducing fatigue or attention drift. Obtain the skills to open and manipulate samples inside fume cupboard or asbestos handling cabinet.

Table continues

Table A9.3 *continued*

Competence short description	Detail of core competence
	Understand operation of the fume cupboard, the requirements for maintenance of performance (including regular measurement of face velocity), and how to prepare samples (eg matrix removal separation by foreseeable methods such as crushing, washing, ashing). etc. Understand how to use refractive index liquids to identify fibres and other HSG248 observation methods. Understand how to use the dispersion staining methods/Becke line plus meaning of relief. If required in job role: understand how to carry out the water absorption test for AC and describe the water-related properties of asbestos fibres in PLM. Be able to carry out the test for discriminating AIB and AC. Be able to recognise any issues which may be posed by differing asbestos fibre orientation in the field of view. Understand the meaning of and apply in practical work the key properties used for the PLM identification of asbestos. Be aware of the changes that may occur in the properties used to identify asbestos when samples have been stressed in some way (eg exposed to high temperatures or acid). Be aware of common causes of inaccuracy: small samples; limits of detection for the methods; contamination handling; storage; human error. Be familiar with identification/discrimination of a range of common non-asbestos fibres (eg machine-made, organic and other mineral fibres). Understand and know how to comply with the relevant parts of the quality system and UKAS guidance and explain the importance of following correct procedures such as for sample preparation, avoiding cross-contamination, taking the appropriate time and care (eg analysing layered materials or samples with fibres dispersed or bound in a matrix). Be aware of the AIMS scheme and their part in it. Understand how to report in accordance with accredited/standard procedures when preparing fit-for-purpose reports suitable for experienced and inexperienced clients.

Table A9.4 Air sampling and fibre counting

Competence short description	Detail of core competence
To apply the appropriate methods for setting up air monitoring equipment for a range of purposes and count fibres accurately according to the approved protocols. Understand common sources of sampling error. Prepare samples for counting. **Count to the appropriate standard (RICE/WHO). Calculate fibre concentrations. Understand the range of additional methods such as SEM and TEM.** **Understand the components of and the need for QA systems and revisit the analyst's duties under HSW Act 1974.** **Where appropriate, carry out clearance for reoccupation after removal of ACMs.** **Understand concept of as low as reasonably practicable (ALARP; minimising exposure) and relate to clearance work.**	Be able to set up sampling kit for fibre monitoring including enclosure leak testing, background testing, personal monitoring/respirator zones, clearance certification and reassurance sampling. Understand the importance of recording detailed contextual information when collecting personal samples. Be able to demonstrate: ■ use of cowls/filters/rotameters; ■ calibration of sampling rate; ■ use of flowmeters(s), flow rate correction; Understand types of sampling error. Be able to prepare microscope slides following sampling. Be able to set up a range of light microscopes and illumination. Be able to demonstrate: ■ adjustment/micrometer; ■ use of graticule; ■ use of test slide. Understand and perform PCM. Be able to apply the method of fibre counting required by CAR and and HSG248 Asbestos: The Analysts' Guide. Be able to inspect and prepare/mount filters and plan for post-sampling handling and quality control tasks such as counting blank filters. Understand and be able to apply the fibre counting rules consistently, in practice, to RICE and WHO standards. Be able to carry out counts for a range of fibre types and densities and calculate fibre concentrations and refer to standards/control limits.

Competence short description	Detail of core competence
Identify good and poor practice in maintenance and removal work. **Practical implications of CAR and CDM roles and requirements for and use of plans of work, method statements, health and safety files, supervision.** **Detailed knowledge of removal work plant equipment, methods and assessment, the stages and requirements during stages of 4-stage clearance and handling problems.** **Personal qualities of resilience, determination and integrity when making decisions as to standard of site cleanliness etc.** **Keep and issue records and documentation.** **Be able to prepare suitable reports for a range of client types and deal with both licensed and non-licensed work.**	Understand how to calculate fibre concentrations, fibre densities, limit of quantification, pooled samples and time-weighted averages. Be able to explain retention of filter requirements. Understand the problems and challenges presented by the methods prescribed. Understand when monitoring is not required. Be able to report to a range of client types in writing and verbally. Be able to complete personal sampling report form (ie template in Appendix A6.3) including the contextual information. Be able to outline the difficulties of consistency and the part played by UK and international schemes such as RICE and accreditation by UKAS to ISO 17025 and similar standards. Understand the importance of internal and external audits and quality systems for reliability and accuracy and their own role in the system. Understand their individual duties under HSW Act to carry out their work diligently so as not to create danger to others. Be able to explain the range of possible sampling strategies (eg the difference between sampling where there is work disturbing asbestos and when no disturbance work is involved). Understand when asbestos fibres may not predominate and where discrimination by EM would be more appropriate. (If using SEM/TEM methods additional competences would be required.) Good knowledge of HSG248 and CAR, L143 ACOP and HSG 247 in particular and responsibilities and legal duties of all roles involved. Understand concepts of minimising exposure below the control limit, clearance levels and STEL and work of short duration, work in and beyond enclosures, limiting contamination, transit routes etc. Be able to recognise compliance and non-compliance in licensed contractor work. Understand the analyst's role in relation to CDM 2015 (second contractor triggers health and safety file requirements – integrate with POW etc). Where appropriate, be able to make effective use of contractors' POWs and method statements etc for preparing own POW and scoping 4-stage clearances. Understand current standards/practices and be able to inspect both licensed and non-licensed work for clearances. In particular be able to carry out air sampling to assess: the effectiveness of control measures, the extent of personal exposure and to identify faults in enclosures and DCUs. Understand removal work area visual cleanliness standards and be able to assess them. Understand proper use of CCTV and viewing panels to assess conditions before entry. Understand and know the circumstances for using PPE/RPE, own clothing, transit and primary and full decontamination and DCUs. Understand the analyst's role and tasks (as distinct from contractor's supervisor in relation to cleaning and decontamination). Understand need for safe work and to decontaminate equipment after exit from contaminated areas. Be able to decide when to proceed with visual inspection of a licensed work area, associated areas and clearance sampling and apply the different stages of clearance and certification for reoccupation protocols to all aspects of licensed work and equipment (eg DCU). Understand the contextual and other information to be gathered during 4-stage clearance. Be able to issue valid CfR appropriately supported by evidence and clearly state parameters or conditions. Demonstrate understanding of the clearance limit and the sub-tasks within the 4-stage clearance system; especially how to deal with failing of any stage.

Table continues

Table A9.4 *continued*

Competence short description	Detail of core competence
	Be able to stand firm and justify their professional judgement against foreseeable pressures, be able to problem solve and be able to effectively communicate with the site owner/ultimate client to discuss site owners overseeing role under CDM to make adequate time and resources available. Understand the on-site record-keeping requirements that apply to an analyst and the LARC and the need for appropriate comfort and anti-fatigue measures. Understand the application of the medical examination and health records applicable to licensed work and notifiable non-licensed work and the exemption for sampling under CAR Regulation 3. Understand how to communicate results to an uninformed and informed client and what the results mean for them in accordance with current national and company practice. Be able to complete CfR and DCU formal reports (ie templates A6.1 and A6.2) including explaining any clearance failure. Be able to advise occupier clients to update their own records and plans following changes. Be aware of the non-licensed work certificate of cleanliness (ACOP L143 paragraphs 464–467). Be able to recognise and report on departures from safe and legal waste/equipment handling procedures.

Table A9.5 Building survey work

This table is primarily for survey-related bulk sampling and is included for completeness (no soils-specific competences are included as the Joint Industry Working Group on asbestos in soils has published industry-led guidance at http://www.claire.co.uk/projects-and-initiatives/asbestos-in-soil).

Competence short description	Detail of core competence
Substantial on-site survey work for the duty to manage asbestos, CAR sampling by an analyst who later identifies fibres in the laboratory. **(Other competences will be required if fibre identification is also performed in this role – see Table A9.3.)** **Advise a range of 'duty-to-manage' dutyholders on their legal responsibilities and ways of meeting them in both management and refurbishment and demolition circumstances.** **Propose and carry out suitable survey schemes for both purposes based on observation and knowledge of common ACM uses and locations.** **When giving advice or assessing a site apply HSE guidance (eg HSG264) and the principles of relevant UKAS guidance.** **Make appropriate judgements about controls needed for survey work and controls for licensed and non-licensed work.** **Understand the range of risk assessment and reporting formats in use and the need to make sure that the client is fully involved in agreeing what the survey report will contain and make sure the report lays the foundation of any future management actions by the client.**	Where the job role incorporates major survey work and interaction with clients: Understand principles of and be able to carry out and advise on surveys which enable a client to decide how best to manage their asbestos under the duty to manage. Be able to advise a range of clients in outline how to address their wider duties under CAR, CDM, and the general duties under Sections 2 and 3 HSWA. Understand the general duties of HSWA. One option to demonstrate competence is to obtain accreditation to ISO 17020 (but this is not a legal requirement). Be able to plan and execute management surveys. Be able to plan and execute refurbishment and demolition surveys. In the planning phase, be able to advise the client how to specify the work for clarity and information exchange and be able to gather data, plan (all risks), prepare strategy and safe methods for their own work and carry out a survey suitable to allow a client receiving the results to proceed to plan to manage their asbestos in situ. Be aware of the main requirements of UKAS's RG8 publication. Understand the importation and range of uses of asbestos in past plant, equipment, building and engineering construction practices to a degree that enables them to make accurate judgements about how to best plan and conduct a survey and to then offer the client a suggested structure for drawing up a risk-based management plan and a management system for avoiding inadvertent disturbance of ACMs. The above will include knowledge of building services and plant and equipment for commercial and domestic fire protection, compartmentation, and insulation, braking and process containment. In buildings this should include common airflow patterns and fibre spread etc. Be able to devise suitable proportionate bulk sampling strategies for a variety of situations and ACMs.

Competence short description	Detail of core competence
	Be able to apply the guidance in HSG264 and other relevant HSE online or printed guidance on surveys. Be able to decide when enclosures and DCUs might be needed in respect of survey work. Recognise appropriate construction and other methods for installation, operation and maintenance of same. Be able to identify the location and condition of ACMs and other leading risk factors/parameters to be recorded and taken into account in assessing risk. Be familiar with a range of risk assessment and commonly used decision processes and electronic and hard copy formats. Understand the full range of solutions for minimising asbestos fibre release from in situ ACM and be able to estimate likely fibre release from remedial work. Be able to assess the level of understanding of the individual client and respond accordingly. Be able to make written recommendations for risk-based future actions in a format agreed with the client which is suitable for the client's level of understanding. Understand the relationship between asbestos survey data and the requirements of CDM Regulations. Understand the content and format and be able to create a report for a management survey in accordance with HSG264. Be able to create a suitable report for a demolition and refurbishment survey in accordance with HSG264. Understand the roles of contractors, client and analysts in the legislative framework, the notification requirements that may apply and be aware of the performance levels required.

Table A9.6 Identification and quantification of asbestos in soils

Competence short description	Detail of core competence
Detailed assessment and identification by PLM of asbestos types present in soil sample. **Gravimetric determination of ACMs.** **Discrimination and quantification of free fibres by dispersion and PCM.**	Understand the principles and theory of PLM and be able to practically carry out asbestos sample identification in soils using this process. This must include all sample preparation procedures for bulk analysis. Fully understand the types and forms of asbestos fibres, their uses and the precautions required when handling samples. Fully demonstrate the practical ability to work competently and safely in appropriate ventilated cabinets. Demonstrate practically the ability to carry out qualitative and quantitative assessments and identification of asbestos fibres in soils. Understand the principles and demonstrate the ability to carry out a quantitative assessment of the free fibres of asbestos in soils using dispersion techniques followed by PCM.

End matter

ABBREVIATIONS

AC	Asbestos cement
ACM	Asbestos-containing material
ACOP	Approved Code of Practice
AIB	Asbestos insulating board
AIMS	Asbestos in Materials Scheme
AISS	Asbestos in Soils Scheme
ALARP	As low as reasonably practicable
APF	Assigned protection factor
BOHS	British Occupational Hygiene Society
CAR	Control of Asbestos Regulations (2012 at time of writing)
CfR	Certificate for Reoccupation (4-stage clearance)
DCU	Decontamination unit
EDXA	Energy dispersive X-ray analysis
EM	Electron microscopy
FAAM	Faculty of Asbestos Assessment and Management
FFP3	Filtering facepiece respirator (P3 filter)
FPTSC	Fibre Proficiency Testing Steering Committee
HEPA	High-efficiency particulate arrestor
HSE	Health and Safety Executive
HSWA	Health and Safety at Work etc Act 1974
LOD	Limit of detection
LOQ	Limit of quantification
MMMF	Machine-made mineral fibre
NA	Numerical aperture
NPU	Negative pressure unit (air extraction unit for enclosures)
PCM	Phase contrast microscopy
PLM	Polarised light microscopy
POW	Plan of work
PPE	Personal protective equipment
PVA	Polyvinyl acetate
QA	Quality assurance
QC	Quality control
RI	Refractive index
RICE	Regular Interlaboratory Counting Exchange
RPE	Respiratory protective equipment
RSPH	Royal Society for Public Health
SEM	Scanning electron microscopy
STEL	Short-term exposure limit
TEM	Transmission electron microscopy
TNA	Training needs analysis
UKAS	United Kingdom Accreditation Service

REFERENCES

1 *Report on the Asbestos Analyst Inspection Programme 2015*. Internal HSE report by Dr M Gibson and Mr M Belcher. Published 2018.

2 CAR (2012) Control of Asbestos Regulations http://www.legislation.gov.uk/uksi/2012/632/contents/made

3 *Managing and working with asbestos: Control of Asbestos Regulations 2012 Approved Code of Practice and guidance* L143 2013 https://www.hse.gov.uk/pubns/books/l143.htm

4 *Asbestos essentials: A task manual for building, maintenance and allied trades on non-licensed asbestos work* HSG210 (fourth edition) HSE Books 2018. www.hse.gov.uk/pubns/books/hsg210.htm. Online versions of the Asbestos essentials sheets are available at https://www.hse.gov.uk/asbestos/essentials/index.htm

5 *Asbestos: The licensed contractors' guide* HSG247. HSE Books 2006 www.hse.gov.uk/pubns/books/hsg247.htm (under revision)

6 *Asbestos:* The survey guide HSG264 2012 www.hse.gov.uk/pubns/books/hsg264.htm

7 HSE asbestos health and safety pages https://www.hse.gov.uk/asbestos

8 *Managing asbestos in buildings: A brief guide* INDG223 https://www.hse.gov.uk/pubns/indg223.pdf

9 *A comprehensive guide to managing asbestos in premises* HSG227 HSE Books 2002 www.hse.gov.uk/pubns/books/hsg227.htm

10 Industry publication: CAR-SOIL™ *Control of Asbestos Regulations 2012: Interpretation for managing and working with asbestos in soil and construction and demolition materials* ISBN 978-1-905046-30-0 https://www.claire.co.uk/projects-and-initiatives/asbestos-in-soil

11 CIRIA C733 *Asbestos in soil and made ground: a guide to understanding and managing risks* 2014 https://www.ciria.org/ItemDetail?iProductcode=C733

12 'The quantification of asbestos in soils' ('Blue Book' 2017) in *Methods for the examination of waters and associated materials* series. Standing Committee of Analysts (SCA) (withdrawn December 2020).

13 Health and Safety at Work etc Act 1974 (c.37) The Stationery Office 1974 www.legislation.gov.uk/ukpga/1974/37

14 *Managing health and safety in construction: Construction (Design and Management) Regulations 2015 Guidance on Regulations* L153 HSE Books https://www.hse.gov.uk/pubns/books/l153.htm

15 Safety Representatives and Safety Committees Regulations 1977 SI 1977/500 The Stationery Office 1977

16 Health and Safety (Consultation with Employees) Regulations 1996 SI 1996/1513 The Stationery Office 1996

17 https://www.hse.gov.uk/asbestos/dangerous.htm

18 Asbestos-related diseases https://www.hse.gov.uk/statistics/causdis/asbestos-related-disease.pdf

19 *RR728 – Projection of mesothelioma mortality in Great Britain* 2009 https://www.hse.gov.uk/research/rrhtm/rr728.htm

20 Hodgson JT and Darnton A 'The quantitative risks of mesothelioma and lung cancer in relation to asbestos exposure' *Annals of Occupational Hygiene* 2000 **44** 565–601 annhyg.oxfordjournals.org/content/44/8/565.full.pdf

21 *HSL Nominated asbestos personnel exposures to asbestos during bulk sampling* HSL Report Number OH/2014/32, July 2014

22 HSE webpage guidance on risk assessment for work with asbestos http://www.hse.gov.uk/asbestos/risk-assessments.htm

23 *Guidance for doctors on medical surveillance of workers doing non-licensed work with asbestos* Medical Guidance Note MS34 December 2018; Series code: MS34 (rev1). http://www.hse.gov.uk/pubns/ms34.htm

24 ISO/IEC 17025:2017 *General requirements for the competence of testing and calibration laboratories International Organisation for Standardisation 2017*

25 Faculty for Asbestos Assessment and Management (FAAM) https://www.bohs.org/membership/for-individuals/working-professional/faam-membership/

26 Royal Society for Public Health (RSPH) https://www.rsph.org.uk/qualifications/learners/find-a-qualification.html?q=&place=&category=FF1AC63D-2B41-48F7-99AFBD3962717A24

27 LAB 30 *Application of ISO/IEC 17025 for asbestos sampling and testing* (third edition) 2015 https://www.ukas.com/technical-services/publications/publications-relating-to-laboratories/

28 BS EN ISO/IEC 17020:2012 *Conformity assessment. Requirements for the operation of various types of bodies performing inspection*. British Standards Institution

29 United Kingdom Accreditation Service (UKAS) https://www.ukas.com/technical-services/publications

30 RICE Regular Interlaboratory Counting Exchange https://www.hsl.gov.uk/proficiency-testing-schemes/rice

31 AIMS Asbestos in Materials Scheme http://www.hsl.gov.uk/proficiency-testing-schemes/aims

32 AISS Asbestos in Soils Scheme http://www.hsl.gov.uk/proficiency-testing-schemes/aiss

33 BOHS http://www.bohs.org/qualifications-training/bohs-qualifications/#asbestos

34 The Work at Height Regulations 2005 http://www.legislation.gov.uk/uksi/2005/735/contents/made

35 BS 8520-3:2009 *Equipment used in the controlled removal of asbestos containing materials. Operation, cleaning and maintenance of class H vacuum cleaners. Code of practice* British Standards Institution https://shop.bsigroup.com/ProductDetail/?pid=000000000030189958

36 *Asbestos in some types of marble and other stone: assessing the risk.* https://www.hse.gov.uk/pubns/am1.htm

37 *Determination of airborne fibre number concentrations: A recommended method, by phase-contrast optical microscopy (membrane filter method)* World Health Organization 1997 https://www.who.int/occupational_health/publications/en/oehairbornefibre.pdf

38 Gibson MJ *Asbestos enclosure ventilation research* 2014 www.hse.gov.uk/asbestos/assets/docs/enclosureventresearch.pdf

39 Environmental Protection Act 1990. The Stationery Office 1990 www.legislation.gov.uk

40 The Controlled Waste (England and Wales) Regulations 2012. The Stationery Office 2012 www.legislation.gov.uk

41 *Guidance on the classification and assessment of waste* (version 1.1) 2018 Technical Guidance WM3 https://www.gov.uk/government/publications/waste-classification-technical-guidance

42 *R&D 66 Guidance for the safe development of housing on land affected by contamination* http://www.nhbc.co.uk/NHBCpublications/LiteratureLibrary/Technical/filedownload,33595,en.pdf

43 *Technical guidance on the management of contaminated land including how to investigate, assess and manage the risks* https://www.gov.uk/government/collections/land-contamination-technical-guidance

44 Davies LST *et al*. *Development and validation of an analytical method to determine the amount of asbestos in soils and loose aggregates* CRR/83 1996 www.hse.gov.uk/research/crr_pdf/1996/crr96083b.pdf

45 Schneider T, Davies LST, Burdett G *et al.* 'Development of a method for the determination of low contents of asbestos fibres in bulk material DOI: 10.1039/A800292D'. (Paper) reference section for *Analyst* 1998 **123** 1393–1400 http://lib3.dss.go.th/fulltext/Journal/analyst/Analyst1998/no.6/1998v123n6p1393-1400.pdf

46 The Society of Brownfield Risk Assessment (SoBRA) website information on asbestos in air measurement https://sobra.org.uk/

47 Swartjes, F.A., Tromp, P.C. and Wezenbeek, J.M. *Assessing risks of soil contamination with asbestos* (in Dutch) 2003 RIVM Report 711701034 RIVM, Bilthoven, The Netherlands

48 *Asbestos in soil and made ground good practice site guide* (C765) 2017 Available from CIRIA bookshop https://www.ciria.org/CIRIA/Bookshop/

49 *Respiratory protective equipment at work – a practical guide* HSG53 2013 http://www.hse.gov.uk/pubns/books/hsg53.htm

50 INDG479 *Guidance on respiratory protective equipment (RPE) fit testing*. 2019 HSE www.hse.gov.uk/pubns/books/indg479.htm

51 BS EN ISO 13982-1:2004+A1:2010 *Protective clothing for use against solid particulates. Performance requirements for chemical protective clothing providing protection to the full body against airborne solid particulates (type 5 clothing)* British Standards Institution. https://shop.bsigroup.com/ProductDetail/?pid=000000000030201743

52 Rooker SJ *et al.* 'The visibility of fibres by phase contrast microscopy'. *Journal of American Industrial Hygiene Association* 1982 **43/7** 505–515

53 *Machine-made fibres: Airborne number concentration and classification by phase contrast light microscopy* MDHS 59/2 www.hse.gov.uk/pubns/mdhs/pdfs/mdhs59-2.pdf

54 Brown PW *et al.* 'Developments in the RICE asbestos fibre counting scheme 1992–2000' *Annals of Occupational Hygiene* 2002 **46** 329–339

55 *The expression of uncertainty and confidence in measurement* M 3003 United Kingdom Accreditation Service 2012 https://www.ukas.com/download/publications/publications-relating-to-laboratory-accreditation/M3003-Expression-of-Uncertainty-and-Confidence-in-Measurement-Edition-4-October-2019.pdf

56 Cherrie JW *et al*. 'The influence of fibre density on the assessment of fibre concentration using the membrane filter method' *Journal of American Industrial Hygiene Association* 1986 **47 (8)** 465–474

57 Iles PJ and Johnston AM 'Problems of asbestos fibre counting in the presence of fibre–fibre and particle–fibre overlap' *Annals of Occupational Hygiene* 1984 **27** 389–404

58 Ogden T 'Reproducibility and an outline method' HSE IR/L/MF/95/7. The reproducibility of asbestos counts. HSE Research Paper 18 1982

59 *The expression of uncertainty in testing* LAB 12 United Kingdom Accreditation Service 2016 https://www.ukas.com/technical-services/publications/publications-relating-to-laboratories/

60 Bradbury S *et al. RMS Dictionary of light microscopy: Microscopy handbook* 15 Oxford Science Publishers 1989

61 Deer WA *et al. Rock forming minerals*, Volume 3: Sheet silicates Longmans 1962

62 Deer WA *et al. Rock forming minerals*, Volume 2: Chain silicates Longmans 1962 (Also *Rock Forming Minerals*, Volume 2B, Double Chain Silicates (second edition) edited by WA Deer, RA Howie and J Zussman. The Geological Society, London, 1997

63 Michaels L and Chissick SS 'Chapter 2 The mineralogy of asbestos' *Asbestos. Properties, applications and hazards* Volume 1 John Wiley and Sons Ltd 1979

64 Hodgson AA *Fibrous silicates*: Lecture Series 1965, Number 4 The Royal Institute of Chemistry 1965

65 Michaels L and Chissick SS Chapter 3 'Chemistry and physics of asbestos' *Asbestos. Properties, applications and hazards* Volume 1 John Wiley and Sons Ltd 1979

66 Hodgson AA *Scientific advances in asbestos*, 1967–85 Anjalena Publications 1986

67 Walton WH 'The nature, hazards and assessment of occupational exposure to airborne asbestos dust: A review' *Annals of Occupational Hygiene* 1982 **25 (2)** 117–247 A2.4

68 Control of Substances Hazardous to Health Regulations 2002 SI 2002/2677 The Stationery Office 2002 http://www.legislation.gov.uk/uksi/2002/2677/pdfs/uksi_20022677_en.pdf

69 BS EN 14175:2003 *Fume cupboards. Type test methods* available from http://shop.bsigroup.com (Note BS 7258, Parts 1, 2, 3 and 4– apply to fume cupboards installed in the work place prior to 2004)

70 BS 7989:2001 *Specification for recirculatory filtration fume cupboards* available from https://shop.bsigroup.com/

71 McCrone WC *Asbestos identification* (second edition) McCrone Research Institute 1987

72 *Bulk asbestos reference minerals for optical microscope identification: Preparation, evaluation and validation* CRR159 HSE Books 1997

73 Addison J and Davies L 'Analysis of amphibole and chrysotile asbestos in the presence of other minerals' *Annals of Occupational Hygiene* 1990 **34** 159–175

74 Hartshorne NH and Stuart A *Crystals and the polarising microscope* (fourth edition) Edward Arnold 1970

75 McCrone WC *et al. Polarised light microscopy* McCrone Research Institute 1979

76 Dorling M and Zussman J 'Characteristics of asbestiform and non-asbestiform amphiboles' *Lithos* 1987 **20** 469–489

77 *Mineral fibres: Crystal chemistry, chemical-physical properties, biological interaction and toxicity* EMU Notes in Mineralogy – Volume 18 http://www.minersoc.org/EMU-notes-18.html

78 NIOSH *Asbestos fibers and other elongate mineral particles: state of the science and roadmap for research* DHHS Publication No. 2011-159 2011 https://www.cdc.gov/niosh/docs/2011-159/pdfs/2011-159.pdf

79 Wylie AG *Discriminating amphibole cleavage fragments from asbestos: Rationale and methodology*. Proceedings of the VIIth International Pneumoconiosis Conference (Pittsburgh August 1988), DHHS (NIOSH) Publication 90108 part 2 November 1990 1065-1069

80 Kelse W and Thompson CS 'The regulatory and mineralogical definitions of asbestos and their impact on amphibole dust analysis' *Journal of The American Industrial Hygiene Association* 1989 **50 (11)** 613–622

81 Wylie AG and Candela PA 'Methodologies for determining the sources, characteristics, distribution, and abundance of asbestiform and nonasbestiform amphibole and serpentine in ambient air and water' *Journal of Toxicology and Environmental Health* B Crit Rev. 2015 **18(1)** 1–42. doi: 10.1080/10937404.2014.997945.

82 Vignaroli G *et al*. 'Asbestos fibre identification vs. evaluation of asbestos hazard in ophiolitic rock melanges, a case study from the Ligurian Alps (Italy)' *Environ Earth Sci* 2014 72 3679–3698. doi: 10.1007/s12665-014-3303-9

83 Monkman LJ 'Procedures for the Detection and Identification of Asbestos and Other Fibres in Fibrous Inorganic Materials' *Annals of Occupational Hygiene* 1979 **22** 127–139

84 Prentice J 'Detection and Identification of Asbestos' *Annals of Occupational Hygiene* 1980 **23** 311–313

85 McCrone WC *Asbestos identification* (second edition) McCrone Research Institute 1987

86 Langer AM *et al.* 'Distinguishing between amphibole asbestos fibres and elongate cleavage fragments of their non-asbestos analogues' *Mechanisms in Fibre Carcinogenesis* 1991 253–267

87 Harper M *et al.* 'An inter-laboratory study to determine the effectiveness of procedures for discriminating amphibole asbestos fibers from amphibole cleavage fragments in fiber counting by phase-contrast microscopy' *Annals of Occupational Hygiene* 2012 **56(6)** 645–659

88 Prentice J and Keech M *Alteration of Asbestos with Heat Microscopy and Analysis* March 1989 7–12

89 Laughlin GJ and McCrone WC 'The Effect of heat on the Microscopical Properties of Asbestos' *The Microscope* 1989 **37** 9–15

90 Iles PJ and Jeyaratnam MA *A study of heat degraded chrysotile, amosite and crocidolite by X-ray powder diffraction and optical microscopy* (IR/L/DD/89/1) HSE 1989

91 Churchyard MP and Copeland GKE 'Is it really chrysotile?' *Annals of Occupational Hygiene* 1988 **32** 545–547

92 Health and Safety Executive *Colour vision guidance note* MS7 Third edition 10/05

93 *The Carriage of Dangerous Goods and Use of Transportable Pressure Equipment Regulations* 2009 SI 2009/1348 The Stationery Office 2009 http://www.legislation.gov.uk/uksi/2009/1348/contents/made

94 *The Hazardous Waste (England and Wales) Regulations 2005 SI 2005/94* The Stationery Office 2005 as amended (eg Hazardous Waste (England and Wales) (Amendment) Regulations 2016, S.I. 2016 No.336)

95 *The Special Waste Amendment (Scotland) Regulations 2004* Scottish SI 2004/112 The Stationery Office 2004 http://www.legislation.gov.uk/ssi/2004/112/contents/made

96 *Control of substances hazardous to health* (sixth edition) L5 *The Control of Substances Hazardous to Health Regulations 2002. Approved Code of Practice and guidance* http://www.hse.gov.uk/pubns/books/l5.htm

97 Cherrie JW, Gibson H, McIntosh C *et al.* 'Exposure to fine airborne fibrous dust amongst processors of para-aramid' *Annals of Occupational Hygiene* 1995 39 (4) 403–425

98 Ishida T *et al.* 'Selective detection of airborne asbestos fibers using protein-based fluorescent probes'. *Environmental Science & Technology* 2010, 44 (2), pp 755–759 DOI: 10.1021/es902395h

99 Ishida T *et al.* 'Evaluation of sensitivity of fluorescence-based asbestos detection by correlative microscopy'. *J Fluoresc* 2012 **22** 357–363 DOI 10.1007/s10895-011-0967-3

100 BS ISO 14966:2019. *Ambient air. Determination of numerical concentration of inorganic fibrous particles. Scanning electron microscopy method* International Standards Organisation.

101 BS ISO 10312:2019. *Ambient Air – Determination of asbestos fibres – Direct transfer transmission electron microscopy procedure*. International Standards Organisation.

102 BS ISO 13794:2019. *Ambient air – Determination of asbestos fibres – Indirect transfer transmission electron microscopy method.* International Standards Organisation.

103 Lee E *et al.* 'Comparison of mounting methods for the evaluation of fibers by phase contrast microscopy' *Annals of Occupational Hygiene* 2011 **55 (6)** 644-657. doi: 10.1093/annhyg/mer015

104 BS EN 14899:2005. Characterization of waste – Sampling of waste materials. Framework for the preparation and application of a Sampling Plan. https://shop.bsigroup.com/

105 PD CEN/TR 15310-1:2006 *Characterization of waste. Sampling of waste materials. Guidance on selection and application of criteria for sampling under various conditions* https://shop.bsigroup.com/

106 NEN 5707 *Soil – Inspection and sampling of asbestos in soil and ground particles* https://www.nen.nl/NEN-Shop/Norm/NEN-57072015-nl.htm

107 BS 10175:2011+A2:2017 Investigation of potentially contaminated sites. *Code of practice* https://shop.bsigroup.com/

108 BS ISO 18400-104. Soil quality. Sampling. Part 104. Strategies*, ISO/DIS 18400-104* https://shop.bsigroup.com/

109 WHO air quality guidelines for Europe, 2nd edition, Chapter 6.2 Asbestos WHO Regional Office for Europe, Copenhagen, Denmark, 2000 http://www.euro.who.int/__data/assets/pdf_file/0005/74732/E71922.pdf

ACKNOWLEDGEMENTS

This guidance has been prepared by the Health and Safety Executive (HSE). HSE wishes to recognise the contributions of others in the preparation of this document:

Committee on Fibre Measurement (CFM) members

Mr John Addison, JAC
Mr Rob Bettinson, UKAS
Mr Rob Blackburn, ATaC
Ms Tracey Boyle, WES
Ms Kate Brooks, UKAS
Mr Seamus Lefroy Brooks, LBHG
Ms Sue Burbeck, Adams Environmental
Dr Garry Burdett, HSE
Professor John Cherrie, IOM
Mr Laurie S T Davies, HSE
Mrs Karin Flynn (Karin Virco), OHS
Mr Stephen Forster, IEG
Dr Martin Gibson, HSE
Ms Carol Houghton, MIMA
Mr R Jackson, ROMAR Consultants
Dr Alan Jones, IOM
Miss D Lomas-Fletcher, HSE
Mr Denis Morgan, ESG
Miss Jean Prentice, Consultant
Mr William Sanderson, Consultant
Miss W Smith, UKAS
Mr Barry Tylee, Consultant
Ms Colette Willoughby, Asbestos Compliance Limited

HSE also wishes to recognise those who have provided photographs and diagrams for this publication:

Ms Colette Willoughby, Asbestos Compliance Limited
Mr Darren Payne, Rhodar Ltd

FURTHER INFORMATION

For information about health and safety visit https://books.hse.gov.uk or http://www.hse.gov.uk.

You can view HSE guidance online and order priced publications from the website. HSE priced publications are also available from bookshops.

To report inconsistencies or inaccuracies in this guidance email: commissioning@wlt.com.

British Standards can be obtained in PDF or hard copy formats from BSI: http://shop.bsigroup.com or by contacting BSI Customer Services for hard copies only (tel: 0846 086 9001 email: cservices@bsigroup.com).

The Stationery Office publications are available from The Stationery Office, PO Box 29, Norwich NR3 1GN Tel: 0333 202 5070 Fax: 0333 202 5080. Email:customer.services@tso.co.uk Website: www.tso.co.uk. They are also available from bookshops.

Statutory Instruments can be viewed free of charge at www.legislation.gov.uk where you can also search for changes to legislation.

Environment Agency: www.environment-agency.gov.uk

Scottish Environment Protection Agency: www.sepa.org.uk

Natural Resources Wales/Cyfoeth Naturiol Cymru: https://naturalresources.wales